THIS DRAWING IS THE PROPERTY OF ANALOG DEVICES INC. IT IS NOT TO BE REPRODUCED OR COPIED, IN WHOLE OR IN PART, OR USED IN FURNISHING INFORMATION TO OTHERS, OR FOR ANY OTHER PURPOSE DETRIMENTAL TO THE INTERESTS OF ANALOG DEVICES.
THE EQUIPMENT SHOWN HEREON MAY BE PROTECTED BY PATENTS OWNED OR CONTROLLED BY ANALOG DEVICES.

RELAY CONTROL CHART

CONTROL	CODE	DEVICE	FUNCTION	CONNECTOR

JUMPER TABLE

JP#	ON	OFF
1		
2		
3		
4		
5		

* SEE ASSEMBLY INSTRUCTIONS

REVISIONS

REV	DESCRIPTION	DATE	APPROVED
A	INITIAL RELEASE	29APR21	D. HARRINGTON
B	CHANGES PER ECR-104316	26AUG21	D. HARRINGTON
C	CHANGES PER ECR-105397	03NOV21	D. HARRINGTON
D	CHANGES PER ECR-107846	29MAR22	D. HARRINGTON

EV-SC598-SOM

ADSP-SC598 SYSTEM ON MODULE

P.O SPEC.	BK/BD SPEC.	SOCKET OEM	OEM PART#	HANDLER

TEMPLATE ENGINEER -	DATE
HARDWARE SERVICES M. VALE	29APR21
HARDWARE SYSTEMS -	
TEST ENGINEER -	
COMPONENT ENGINEER M. YAN	29APR21
TEST PROCESS -	
HARDWARE RELEASE K. JABATAN	29APR21
DESIGNER M. VICEDO	29APR21
PTD ENGINEER D. HARRINGTON	29APR21
CHECKER -	

SCHEMATIC

ANALOG DEVICES

HW TYPE : Customer Evaluation Z
Product(s): SC598
: SOM
PACKAGE : LeadCount-lead BodySize PackageType-family
: Pitch-pitch StyleVendor Style

<User Define>
<User Define>
<User Define>

MASTER PROJECT TEMPLATE: TBD
TESTER TEMPLATE: no_template

UNLESS OTHERWISE SPECIFIED DIMENSIONS ARE IN INCHES
TOLERANCES
DECIMALS X.XX +-0.010 X.XXX +-0.005
FRACTIONS +-1/32
ANGLES +-2

DRAWING NO. 02_066733
REV. D

SIZE D | SCALE 1:1 | CODE ID NO. CodeID | SHEET 1 OF 15

REVISIONS			
REV	DESCRIPTION	DATE	APPROVED

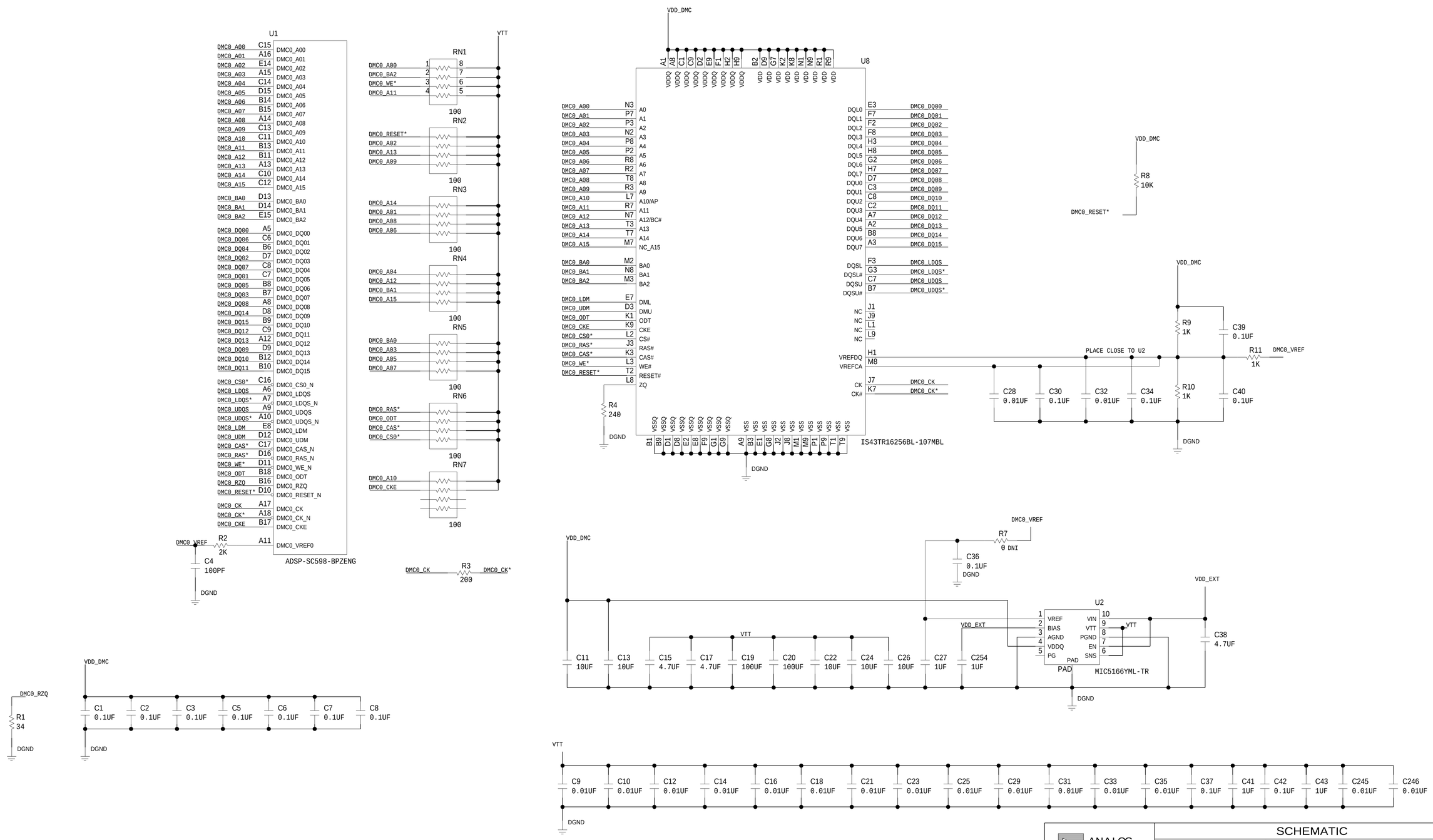

ANALOG DEVICES

THIS DRAWING IS THE PROPERTY OF ANALOG DEVICES INC.
IT IS NOT TO BE REPRODUCED OR COPIED, IN WHOLE OR
IN PART, OR USED IN FURNISHING INFORMATION TO OTHERS,
OR FOR ANY OTHER PURPOSE DETRIMENTAL TO THE INTERESTS
OF ANALOG DEVICES.
THE EQUIPMENT SHOWN HEREON MAY BE PROTECTED BY PATENTS
OWNED OR CONTROLLED BY OWNED ANALOG DEVICES.

SCHEMATIC

HW TYPE : Customer Evaluation Z
Product(s): SC598
: SOM

DESIGN VIEW	DRAWING NO.	REV
<DESIGN_VIEW>	02_066733	D

PTD ENGINEER	SIZE	SCALE	SHEET	OF
D. HARRINGTON	D	1:1	2	15

REVISIONS			
REV	DESCRIPTION	DATE	APPROVED

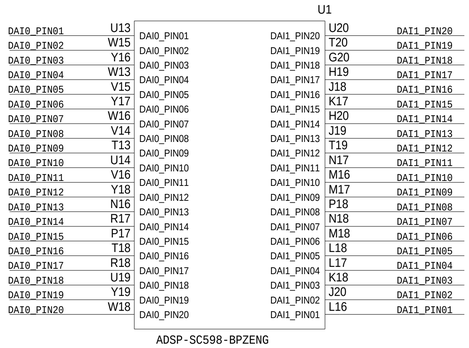

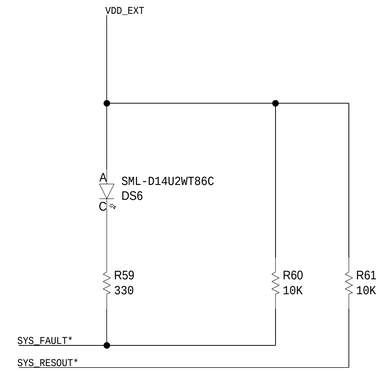

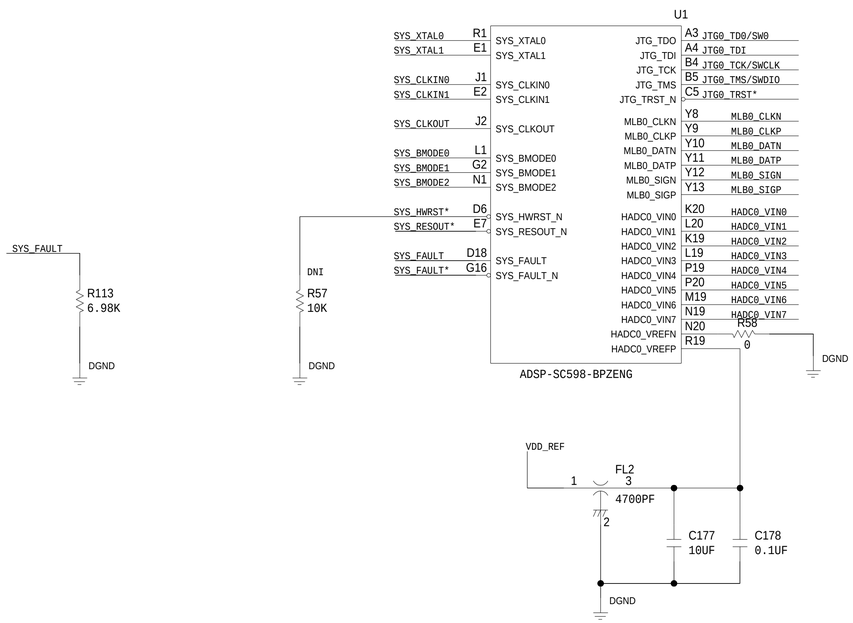

ANALOG DEVICES

SCHEMATIC

HW TYPE : Customer Evaluation Z
Product(s): SC598
: SOM

THIS DRAWING IS THE PROPERTY OF ANALOG DEVICES INC.
IT IS NOT TO BE REPRODUCED OR COPIED, IN WHOLE OR
IN PART, OR USED IN FURNISHING INFORMATION TO OTHERS,
OR FOR ANY OTHER PURPOSE DETRIMENTAL TO THE INTERESTS
OF ANALOG DEVICES.
THE EQUIPMENT SHOWN HEREON MAY BE PROTECTED BY PATENTS
OWNED OR CONTROLLED BY OWNED ANALOG DEVICES.

DESIGN VIEW	DRAWING NO.	REV
<DESIGN_VIEW>	02_066733	D

PTD ENGINEER	SIZE	SCALE	SHEET
D. HARRINGTON	D	1:1	SHEET 3 OF 15

REVISIONS			
REV	DESCRIPTION	DATE	APPROVED

U1

PA_00/SPI2_MISO/OSPI_MISO/SMC0_D00	K2	PA_00	PF_00
PA_01/SPI2_MOSI/OSPI_MOSI/SMC0_D01	L3	PA_01	PF_01
PA_02/SPI2_D2/OSPI_D2/TWI3_SCL/SMC0_D02/TM0_ACLK3	L2	PA_02	PF_02
PA_03/SPI2_D3/OSPI_D3/TWI3_SDA/SMC0_D03	L5	PA_03	PF_03
PA_04/SPI2_CLK/OSPI_CLK/SMC0_D04	L4	PA_04	PF_04
PA_05/SPI2_SEL1B/OSPI_SEL1B/SMC0_D05/SPI2_SSB	M2	PA_05	PF_05
PA_06/SPI0_CLK/UART0_TXB/OSPI_D4/SMC0_D06/TM0_ACLK1	M3	PA_06	PF_06
PA_07/SPI0_MISO/UART0_RXB/OSPI_D5/SMC0_D07/TM0_ACI0	N2	PA_07	PF_07
PA_08/SPI0_MOSI/UART0_RTSB/OSPI_D6/SMC0_D08/TM0_ACLK2	P2	PA_08	PF_08
PA_09/SPI0_SEL1B/UART0_CTSB/OSPI_D7/SMC0_D09/SPI0_SSB	N3	PA_09	PF_09
PA_10/TWI0_SCL/SPI1_CLK/TM0_TMR0/SMC0_D10	M5	PA_10	PF_10
PA_11/TWI0_SDA/SPI1_MISO/HADC0_EOC_OUT/SMC0_D11/TM0_ACI4	V7	PA_11	PF_11
PA_12/FLG0/SPI1_MOSI/TM0_TMR1/SMC0_D12	U8	PA_12	PF_12
PA_13/FLG1/SPI1_SEL1B/TM0_TMR2/SMC0_D13/SPI1_SSB	Y5	PA_13	PF_13
PA_14/TWI2_SCL/SPI1_D2/UART1_RXB/SMC0_D14/TM0_ACI1	V6	PA_14	PF_14
PA_15/TWI2_SDA/SPI1_D3/UART1_TXB/SMC0_D15	T9	PA_15	PF_15
PB_00/MLB0_DAT/TWI1_SCL/UART1_RTSB/SMC0_AMS0B/TM0_ACI3	A19	PB_00	PG_00
PB_01/MLB0_SIG/TWI1_SDA/UART1_CTSB/SMC0_AREB/TM0_CLK	E17	PB_01	PG_01
PB_02/MLB0_CLK/FLG3/LP1_ACK/SMC0_AWEB/TM0_ACLK4	F16	PB_02	PG_02
PB_03/TM0_TMR3/FLG2/SPI2_SEL2B/SMC0_ADDR1/CNT0_UD	D5	PB_03	PG_03
PB_04/TM0_TMR4/SPI1_RDY/LP0_ACK/SMC0_ADDR2/CNT0_ZM	E6	PB_04	PG_04
PB_05/TM0_TMR5/SPI2_RDY/SPI0_SEL2B/SMC0_ADDR3/CNT0_DG	C4	PB_05	PG_05
PB_06/LP0_CLK/SPI1_SEL5B/TRACE0_CLK	V4	PB_06	PG_06
PB_07/LP0_D0/SPI2_SEL5B/TRACE0_D00	Y3	PB_07	PG_07
PB_08/LP0_D1/SPI1_SEL7B/TM0_TMR6/TRACE0_D01	Y2	PB_08	PG_08
PB_09/LP0_D2/SPI2_SEL7B/TM0_TMR7/TRACE0_D02	Y4	PB_09	PG_09
PB_10/LP0_D3/SPI1_SEL2B/TRACE0_D03	U5	PB_10	PG_10
PB_11/LP0_D4/SPI0_RDY/UART2_RXB/TM0_ACI2	U6	PB_11	PG_11
PB_12/LP0_D5/SPI2_SEL3B/UART2_TXB	V5	PB_12	PG_12
PB_13/LP0_D6/SPI1_SEL3B/UART2_RTSB	W5	PB_13	PG_13
PB_14/LP0_D7/SPI0_SEL3B/UART2_CTSB	W17	PB_14	PG_14
PB_15/LP1_D0/SPI0_SEL4B/MISO_CD/SMC0_ADDR4_Z	V20	PB_15	PG_15
PC_00/LP1_D1/TWI4_SCL/TRACE0_D04/SPI1_SEL4B	W20	PC_00	PH_00
PC_01/LP1_D2/TWI4_SDA/TRACE0_D05/SPI2_SEL4B	V19	PC_01	PH_01
PC_02/LP1_D3/TWI5_SCL/TRACE0_D06/SPI1_SEL6B	V17	PC_02	PH_02
PC_03/LP1_D4/TWI5_SDA/TRACE0_D07/SPI2_SEL6B	U16	PC_03	PH_03
PC_04/LP1_D5/OSPI_SEL2B/SMC0_ADDR5	U18	PC_04	PH_04
PC_05/LP1_D6/OSPI_SEL3B/TM0_TMR8/SMC0_ADDR6	P16	PC_05	PH_05
PC_06/LP1_D7/SPI1_RDY/MSI0_WP/SMC0_ADDR7	R16	PC_06	PH_06
PC_07/LP1_CLK/OSPI_SEL4B/TM0_TMR9/SYS_FAULT	T17	PC_07	PH_07
PC_08/OSPI0_CLK/PPI0_D16	M4	PC_08	PH_08
PC_09/OSPI0_D3/PPI0_D17	R2	PC_09	PH_09
PC_10/OSPI0_D2/PPI0_D18	U1	PC_10	PH_10
PC_11/OSPI0_MOSI/PPI0_D19	N4	PC_11	PH_11
PC_12/OSPI0_MISO/PPI0_D20	P3	PC_12	PH_12
PC_13/OSPI0_D7/PPI0_D21	T2	PC_13	PH_13
PC_14/OSPI0_D6/PPI0_D22	V1	PC_14	PH_14
PC_15/OSPI0_D5/PPI0_D23	N5	PC_15	PH_15
PD_00/OSPI0_D4	U2	PD_00	PI_00
PD_01/OSPI0_SELB/PPI0_D06	R3	PD_01	PI_01
PD_02/UART1_RTSB/SH1_FLG10/ETH0_CRS	P4	PD_02	PI_02
PD_03/UART1_CTSB/SH0_FLG11/LP0_ACK/ETH0_PTPAUXIN2	T3	PD_03	PI_03
PD_04/UART1_RXB/OSPI0_DQS/PPI0_D07/TM0_ACI1	V2	PD_04	PI_04
PD_05/UART1_TXB/PPI0_D08/ETH0_PTPAUXIN1	W1	PD_05	PI_05
PD_06/UART0_CTSB/ETH0_RX_ER	U3	PD_06	PI_06
PD_07/UART0_RTSB/ETH0_COL	T4	PD_07	
PD_08/UART0_RXB/TM0_ACI0	R5	PD_08	
PD_09/UART0_TXB	P5	PD_09	
PD_10/UART2_RXB/PPI0_D09/TM0_ACI2	R4	PD_10	
PD_11/UART2_TXB/PPI0_D10	W3	PD_11	
PD_12/ETH0_PHY_INT/TM0_TMR6/UART2_RTSB/PPI0_D11	W4	PD_12	
PD_13/TM0_TMR7/UART2_CTSB/PPI0_D12	Y7	PD_13	
PD_14/TWI4_SCL/LP1_ACK/SH1_FLG9/PPI0_D13	W6	PD_14	
PD_15/TWI4_SDA/MSI0_D0/TM0_TMR15/PPI0_D14_Z	Y6	PD_15	
PE_00/TWI5_SCL/SPI3_SEL3B/PPI0_D15	W7	PE_00	
PE_01/TWI5_SDA/MSI0_D1/SPI3_SEL4B/PPI0_FS1/TM0_ACLK15_Z	U9	PE_01	
PE_02/TWI0_SCL/SPI1_SEL4B/HADC0_MUX0/PPI0_FS2	V8	PE_02	
PE_03/TWI0_SDA/SPI2_SEL3B/HADC0_MUX2/PPI0_FS3/TM0_ACLK4	W8	PE_03	
PE_04/TWI2_SCL/HADC0_MUX1/PPI0_CLK	W9	PE_04	
PE_05/TWI2_SDA/PPI0_D00	V10	PE_05	
PE_06/TM0_TMR8/SH0_FLG2/MSI0_D2/PPI0_D01_Z	U10	PE_06	
PE_07/TM0_TMR9/SH0_FLG3/SPI1_RDY/PPI0_D02	W12	PE_07	
PE_08/TM0_TMR0/MSI0_D3/PPI0_D03_Z	V9	PE_08	
PE_09/TM0_TMR1/MSI0_CLK/PPI0_D04/ETH0_PTPAUXIN3_Z	W10	PE_09	
PE_10/TM0_TMR2/SPI0_SEL4B/PPI0_D05	F20	PE_10	
PE_11/ETH1_REFCLK/SH1_FLG7	G19	PE_11	
PE_12/ETH1_TXEN/SH0_FLG8	H18	PE_12	
PE_13/ETH1_TXD0/SH1_FLG13	J17	PE_13	
PE_14/ETH1_TXD1/SPI2_SEL7B	K16	PE_14	
PE_15/ETH1_RXD0/SPI0_SEL6B	G18	PE_15	

F19	PF_00/ETH1_RXD1/SPI3_RDY/SPI0_SEL7B
F18	PF_01/ETH1_MDIO/SH0_FLG7
E20	PF_02/ETH1_MDC/SH0_FLG6
E19	PF_03/ETH1_CRS/SH0_FLG10/USB0_STP
H17	PF_04/USB0_D7/TM0_ACLK13
J16	PF_05/MLB0_CLKOUT/USB0_D6/TM0_CLK
G17	PF_06/SH1_FLG2/SPI1_SEL7B/USB0_D5
D20	PF_07/SH1_FLG3/SPI3_SEL2B/USB0_D4
D19	PF_08/SPI3_SEL6B/SH1_FLG8/USB0_NXT/TM0_TMR11
C20	PF_09/SH0_FLG9/USB0_DIR
E18	PF_10/SH1_FLG4/USB0_D3
F17	PF_11/SH1_FLG5/USB0_D2
H16	PF_12/SH0_FLG13/USB0_D1
B20	PF_13/SH0_FLG12/USB0_D0
C19	PF_14/SH1_FLG12/USB0_CLK
T10	PF_15/CAN0_RX/TM0_ACI4
U11	PG_00/CAN0_TX/TM0_ACLK10
W11	PG_01/CAN1_RX/SPI2_SEL6B/MSI0_CMD/TM0_ACI11_Z
V11	PG_02/CAN1_TX/SPI0_SEL5B/MSI0_D4_Z
Y14	PG_03/UART3_TXB
V13	PG_04/UART3_RXB/TM0_ACI13
W14	PG_05/SPI3_CLK/TM0_ACLK11
T11	PG_06/SPI3_MISO
U12	PG_07/SPI3_MOSI/TM0_ACLK12
Y15	PG_08/SPI3_SEL1B/MSI0_D5/SPI3_SSB_Z
V12	PG_09/UART3_RTSB/SPI1_SEL6B/SH0_FLG14/MSI0_D6/TM0_ACLK1_Z
T12	PG_10/UART3_CTSB/MSI0_D7/SH1_FLG14/TM0_ACLK3_Z
B3	PG_11/SH1_FLG15
A2	PG_12/TM0_TMR3/SPI2_SEL4B/SH1_FLG11/OSPI0_SEL3B
B1	PG_13/SH0_FLG0/SH1_FLG6/OSPI0_SEL4B
C2	PG_14/TM0_TMR10/SPI0_SEL2B/SMC0_ADDR25/TM0_ACI10
D3	PG_15/TM0_TMR11/SPI2_RDY/SPI3_SEL5B/SMC0_ADDR24
E4	PH_00/TM0_TMR12/SPI3_SEL7B/SMC0_ADDR23/TM0_ACI12
F5	PH_01/TM0_TMR13/SPI0_RDY/SMC0_ADDR22/TM0_ACI13
G5	PH_02/SH0_FLG1/SPI2_SELB/TM0_TMR14/SMC0_ADDR21
K3	PH_03/ETH0_MDC/TRACE0_D08/SMC0_AMS1B
F2	PH_04/ETH0_MDIO/TRACE0_D09/SMC0_AMS2B
H2	PH_05/ETH0_RXD0/TRACE0_D10/SMC0_AMS3B
K4	PH_06/ETH0_RXD1/TRACE0_D11/SMC0_ABE0B
K5	PH_07/ETH0_RXCLK_REFLCK/TRACE0_D12/SMC0_ABE1B
F1	PH_08/ETH0_RXCTL_RXDV/TRACE0_D13/SMC0_AOEB
H3	PH_09/ETH0_TXD0/TRACE0_D14/SMC0_ARDYB
G3	PH_10/ETH0_TXD1/TRACE0_D15/SMC0_ADDR8
F3	PH_11/ETH0_RXD2/SMC0_ADDR9
J3	PH_12/ETH0_RXD3/SMC0_ADDR10
J4	PH_13/ETH0_TXCTL_TXEN/SMC0_ADDR11
H4	PH_14/ETH0_TXCLK/SMC0_ADD12
G4	PH_15/ETH0_TXD2/SMC0_ADDR13
J5	PI_00/ETH0_TXD3/SMC0_A14
D1	PI_01/SH1_FLG0/ETH0_PTPCLKIN0/TWI2_SCL/SMC0_ADDR15
F4	PI_02/SH1_FLG1/ETH0_PTPAUXIN0/TWI3_SDA/SMC0_ADDR16
E3	PI_03/TWI1_SCL/SH0_FLG4/ETH0_PTPPPS1/SMC0_ADDR17
D2	PI_04/TWI1_SDA/SH0_FLG5/ETH0_PTPPPS0/SMC0_ADDR18
C1	PI_05/ETH0_PTPPPS2/OSPI0_SEL2B/SH0_FLG15/SMC0_ADDR19/TM0_ACLK2
H5	PI_06/ETH0_PTPPPS3/SMC0_ADDR20/TM0_ACLK14

ADSP-SC598-BPZENG

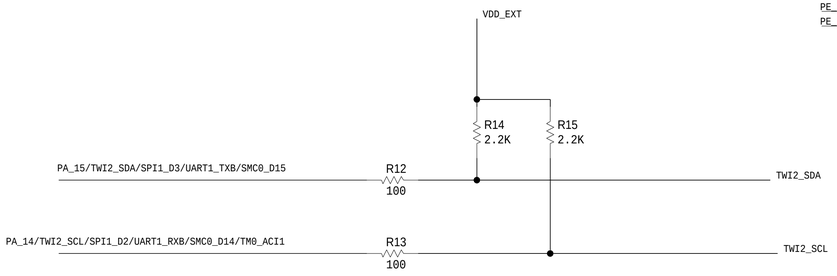

ANALOG DEVICES

THIS DRAWING IS THE PROPERTY OF ANALOG DEVICES INC.
IT IS NOT TO BE REPRODUCED OR COPIED, IN WHOLE OR
IN PART, OR USED IN FURNISHING INFORMATION TO OTHERS,
OR FOR ANY OTHER PURPOSE DETRIMENTAL TO THE INTERESTS
OF ANALOG DEVICES.
THE EQUIPMENT SHOWN HEREON MAY BE PROTECTED BY PATENTS
OWNED OR CONTROLLED BY OWNED ANALOG DEVICES.

SCHEMATIC

HW TYPE : Customer Evaluation Z
Product(s): SC598
: SOM

DESIGN VIEW	DRAWING NO.	REV
<DESIGN_VIEW>	02_066733	D

PTD ENGINEER	SIZE	SCALE	SHEET	OF
D. HARRINGTON	D	1:1	4	15

REVISIONS			
REV	DESCRIPTION	DATE	APPROVED

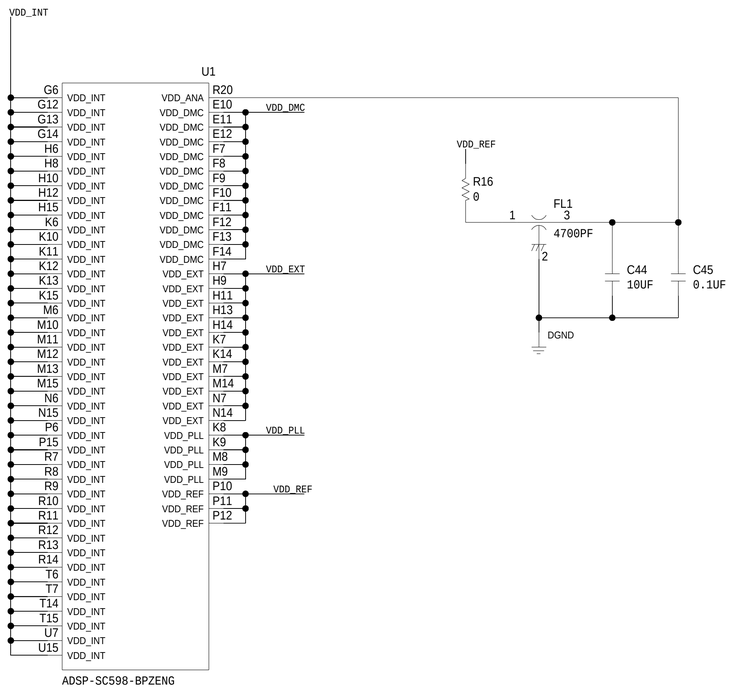

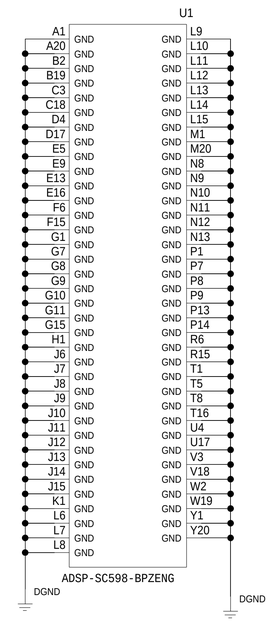

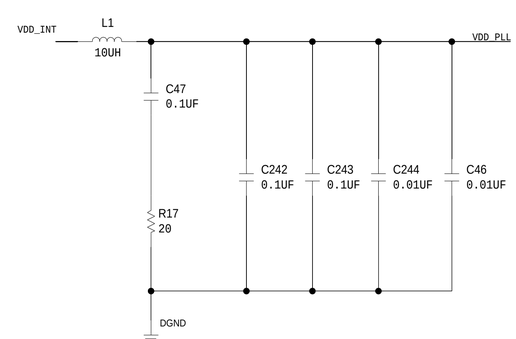

ANALOG DEVICES

THIS DRAWING IS THE PROPERTY OF ANALOG DEVICES INC.
IT IS NOT TO BE REPRODUCED OR COPIED, IN WHOLE OR
IN PART, OR USED IN FURNISHING INFORMATION TO OTHERS,
OR FOR ANY OTHER PURPOSE DETRIMENTAL TO THE INTERESTS
OF ANALOG DEVICES.
THE EQUIPMENT SHOWN HEREON MAY BE PROTECTED BY PATENTS
OWNED OR CONTROLLED BY OWNED ANALOG DEVICES.

SCHEMATIC

HW TYPE : Customer Evaluation Z
Product(s): SC598
: SOM

DESIGN VIEW	DRAWING NO.	REV
<DESIGN_VIEW>	02_066733	D

PTD ENGINEER	SIZE	SCALE	SHEET	OF
D. HARRINGTON	D	1:1	5	15

REVISIONS			
REV	DESCRIPTION	DATE	APPROVED

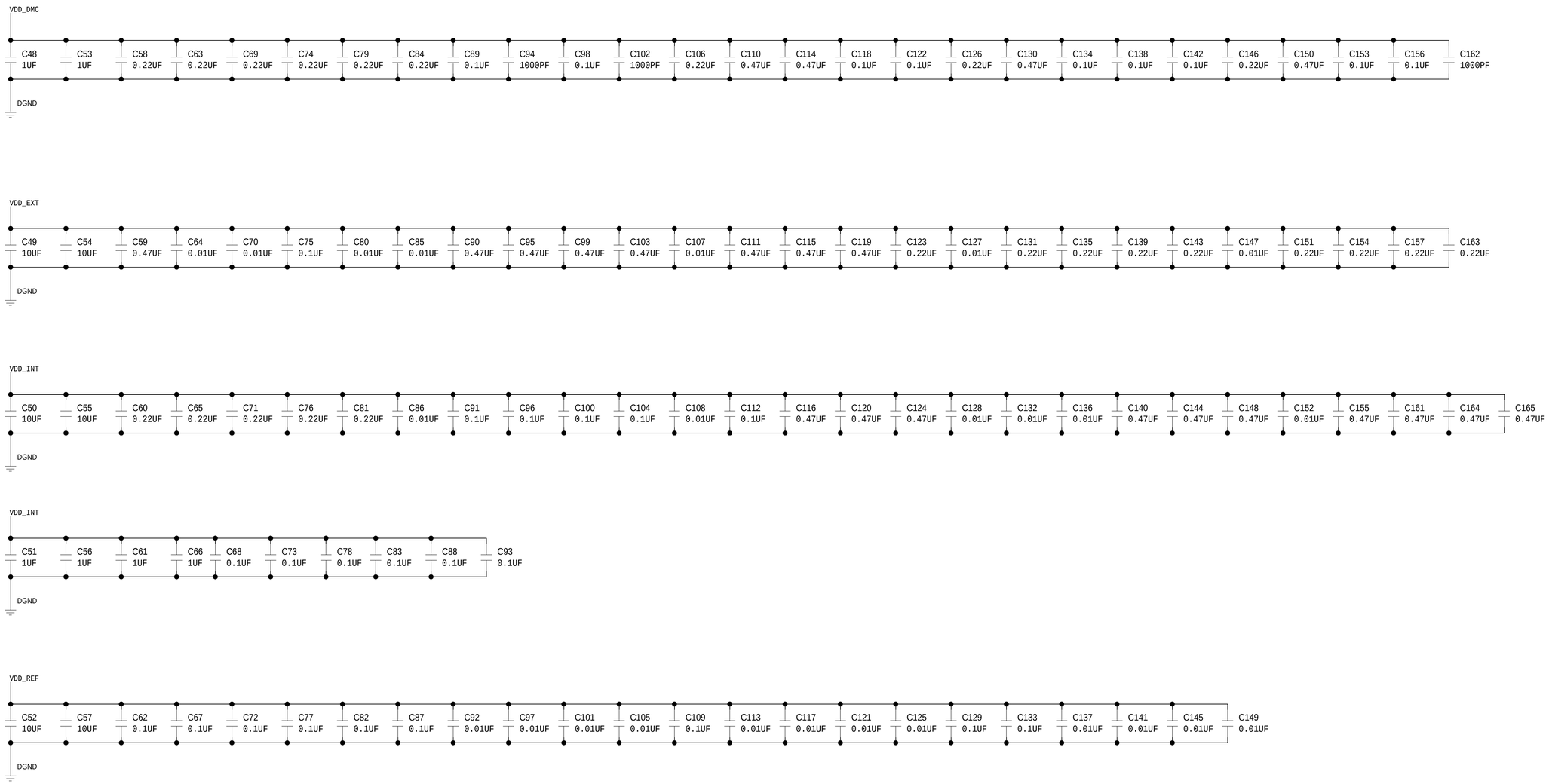

ANALOG DEVICES

THIS DRAWING IS THE PROPERTY OF ANALOG DEVICES INC.
IT IS NOT TO BE REPRODUCED OR COPIED, IN WHOLE OR
IN PART, OR USED IN FURNISHING INFORMATION TO OTHERS,
OR FOR ANY OTHER PURPOSE DETRIMENTAL TO THE INTERESTS
OF ANALOG DEVICES.
THE EQUIPMENT SHOWN HEREON MAY BE PROTECTED BY PATENTS
OWNED OR CONTROLLED BY OWNED ANALOG DEVICES.

SCHEMATIC

HW TYPE : Customer Evaluation Z
Product(s): SC598
: SOM

DESIGN VIEW	DRAWING NO.	REV
<DESIGN_VIEW>	02_066733	D

PTD ENGINEER	SIZE	SCALE	SHEET
D. HARRINGTON	D	1:1	6 OF 15

REVISIONS			
REV	DESCRIPTION	DATE	APPROVED

BOOT MODES

0: NO BOOT
1: SPI MASTER BOOT
2: SPI SLAVE BOOT
3: UART BOOT
4: LP0 SLAVE BOOT
5: OSPI BOOT
6: EMMC BOOT

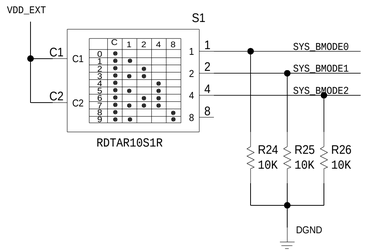

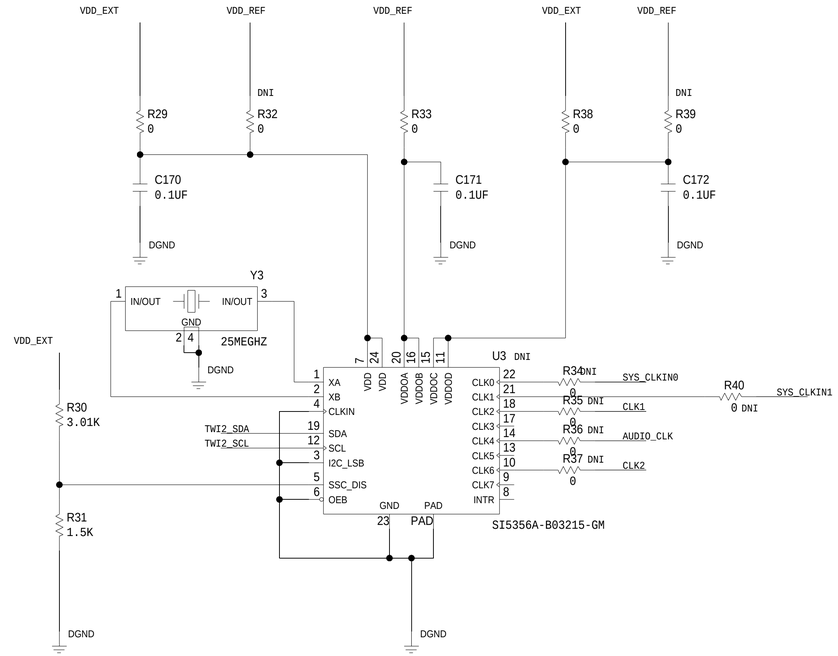

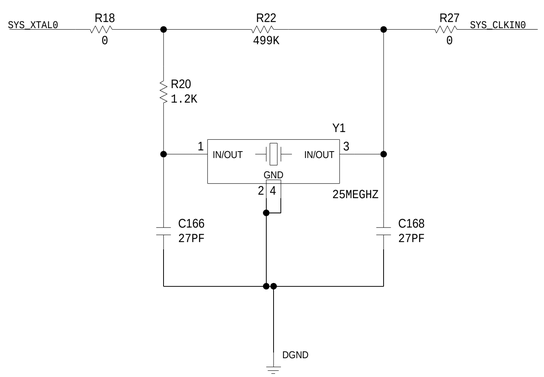

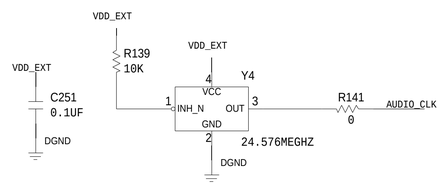

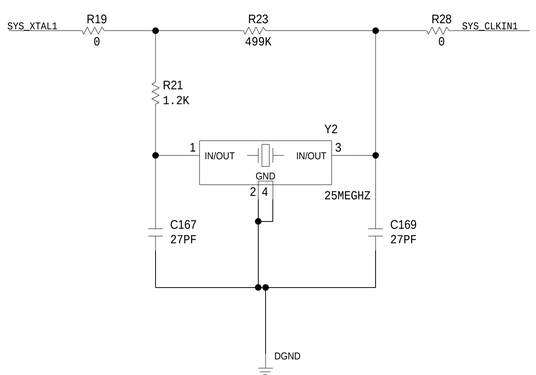

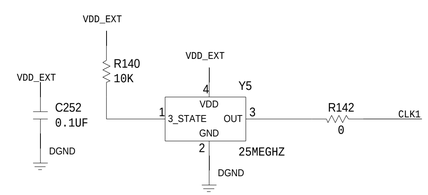

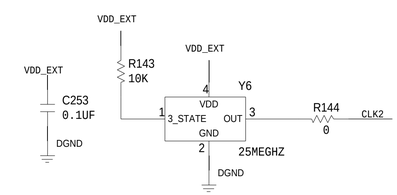

ANALOG DEVICES

THIS DRAWING IS THE PROPERTY OF ANALOG DEVICES INC.
IT IS NOT TO BE REPRODUCED OR COPIED, IN WHOLE OR
IN PART, OR USED IN FURNISHING INFORMATION TO OTHERS,
OR FOR ANY OTHER PURPOSE DETRIMENTAL TO THE INTERESTS
OF ANALOG DEVICES.
THE EQUIPMENT SHOWN HEREON MAY BE PROTECTED BY PATENTS
OWNED OR CONTROLLED BY OWNED ANALOG DEVICES.

SCHEMATIC

HW TYPE : Customer Evaluation Z
Product(s): SC598
: SOM

DESIGN VIEW	DRAWING NO.	REV
<DESIGN_VIEW>	02_066733	D

PTD ENGINEER	SIZE	SCALE	SHEET
D. HARRINGTON	D	1:1	7 OF 15

REVISIONS			
REV	DESCRIPTION	DATE	APPROVED

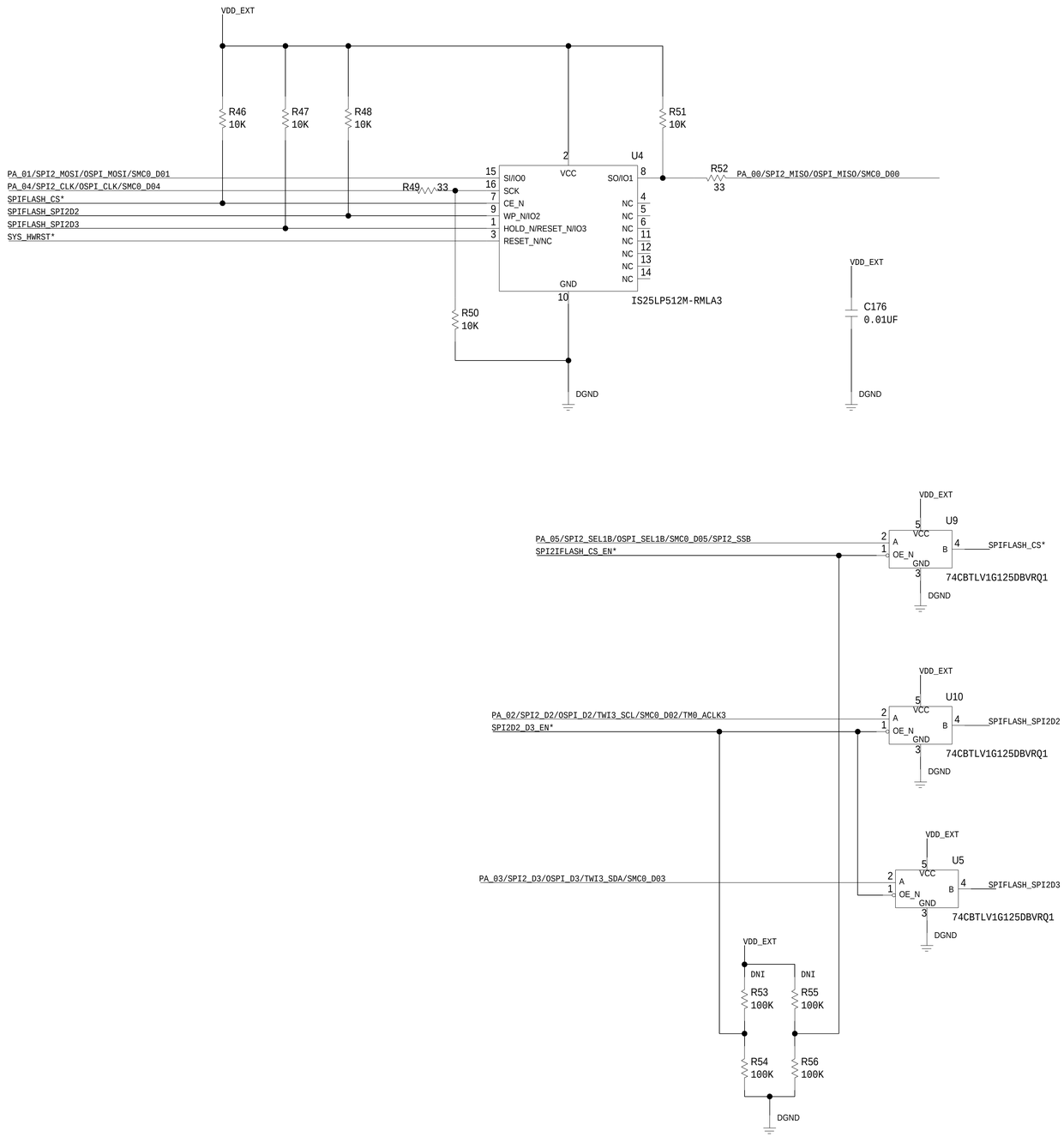

ANALOG DEVICES

SCHEMATIC

HW TYPE : Customer Evaluation Z
Product(s): SC598
: SOM

THIS DRAWING IS THE PROPERTY OF ANALOG DEVICES INC.
IT IS NOT TO BE REPRODUCED OR COPIED, IN WHOLE OR
IN PART, OR USED IN FURNISHING INFORMATION TO OTHERS,
OR FOR ANY OTHER PURPOSE DETRIMENTAL TO THE INTERESTS
OF ANALOG DEVICES.
THE EQUIPMENT SHOWN HEREON MAY BE PROTECTED BY PATENTS
OWNED OR CONTROLLED BY OWNED ANALOG DEVICES.

DESIGN VIEW	DRAWING NO.	REV
<DESIGN_VIEW>	02_066733	D
PTD ENGINEER	SIZE / SCALE	SHEET 8 OF 15
D. HARRINGTON	D / 1:1	

REVISIONS			
REV	DESCRIPTION	DATE	APPROVED

DEFAULT CONFIGURATION - SIGNALS TO EMMC FROM DSP IS CONNECTED, AND SIGNALS FROM DSP TO SOM INTERFACE DISCONNECTED

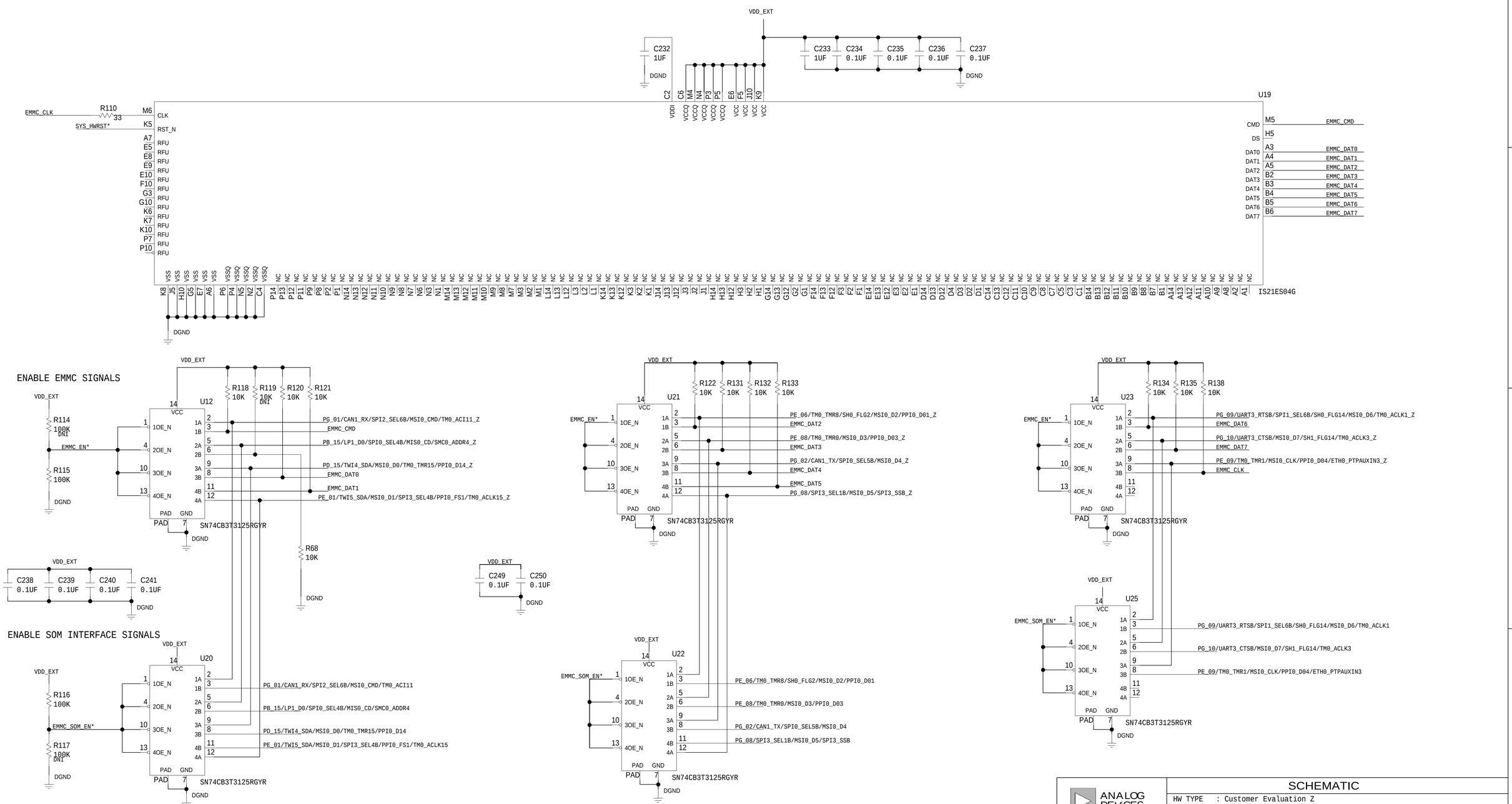

ANALOG DEVICES

THIS DRAWING IS THE PROPERTY OF ANALOG DEVICES INC.
IT IS NOT TO BE REPRODUCED OR COPIED, IN WHOLE OR
IN PART, OR USED IN FURNISHING INFORMATION TO OTHERS,
OR FOR ANY OTHER PURPOSE DETRIMENTAL TO THE INTERESTS
OF ANALOG DEVICES.
THE EQUIPMENT SHOWN HEREON MAY BE PROTECTED BY PATENTS
OWNED OR CONTROLLED BY OWNED ANALOG DEVICES.

SCHEMATIC

HW TYPE : Customer Evaluation Z
Product(s): SC598
: SOM

DESIGN VIEW	DRAWING NO.	REV
<DESIGN_VIEW>	02_066733	D

PTD ENGINEER	SIZE	SCALE	SHEET 9 OF 15
D. HARRINGTON	D	1:1	

REVISIONS			
REV	DESCRIPTION	DATE	APPROVED

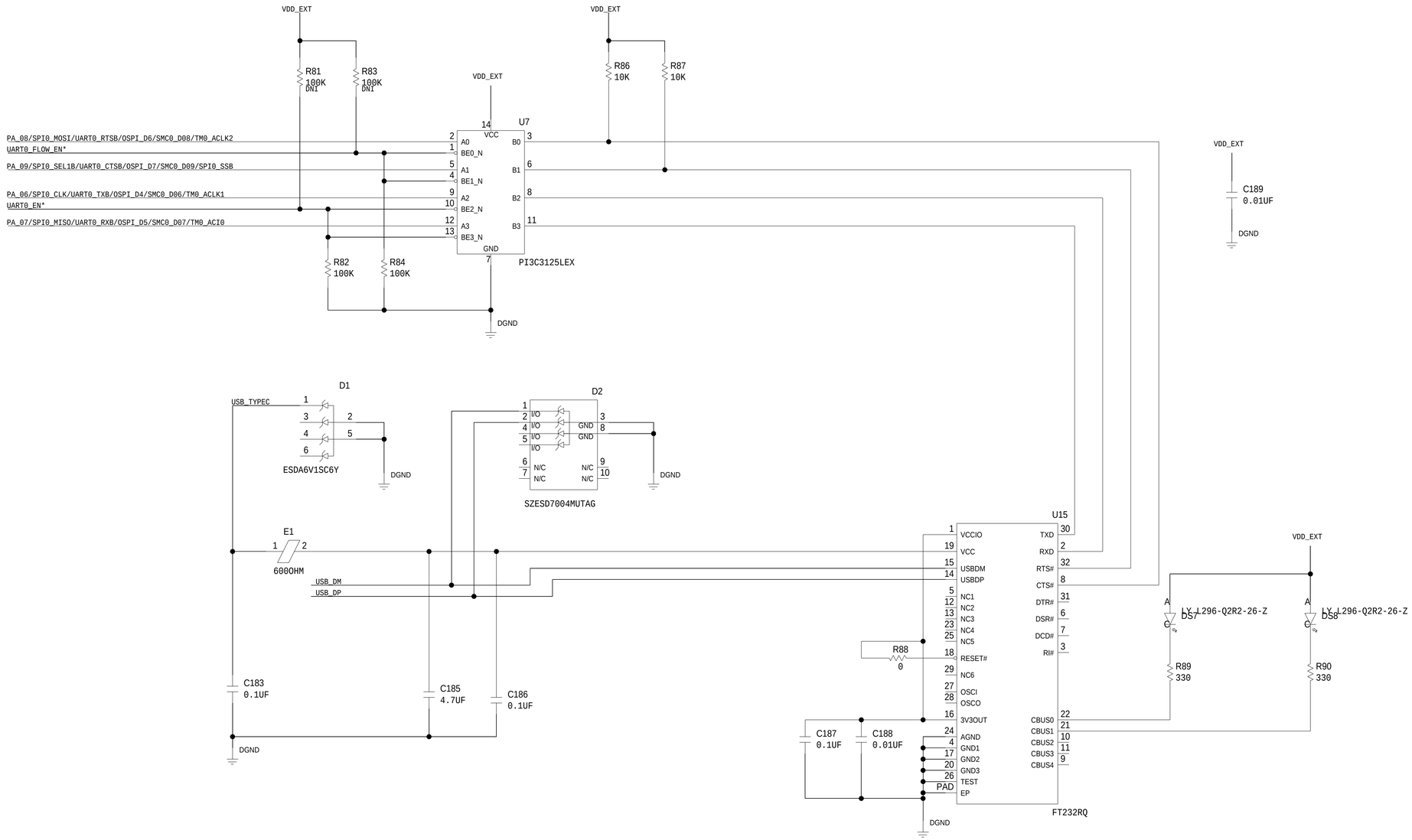

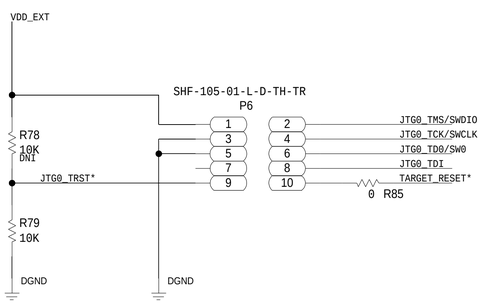

ANALOG DEVICES

THIS DRAWING IS THE PROPERTY OF ANALOG DEVICES INC.
IT IS NOT TO BE REPRODUCED OR COPIED, IN WHOLE OR
IN PART, OR USED IN FURNISHING INFORMATION TO OTHERS,
OR FOR ANY OTHER PURPOSE DETRIMENTAL TO THE INTERESTS
OF ANALOG DEVICES.
THE EQUIPMENT SHOWN HEREON MAY BE PROTECTED BY PATENTS
OWNED OR CONTROLLED BY OWNED ANALOG DEVICES.

SCHEMATIC

HW TYPE : Customer Evaluation Z
Product(s): SC598
: SOM

DESIGN VIEW	DRAWING NO.	REV
<DESIGN_VIEW>	02_066733	D

PTD ENGINEER	SIZE	SCALE	SHEET
D. HARRINGTON	D	1:1	10 OF 15

REVISIONS			
REV	DESCRIPTION	DATE	APPROVED

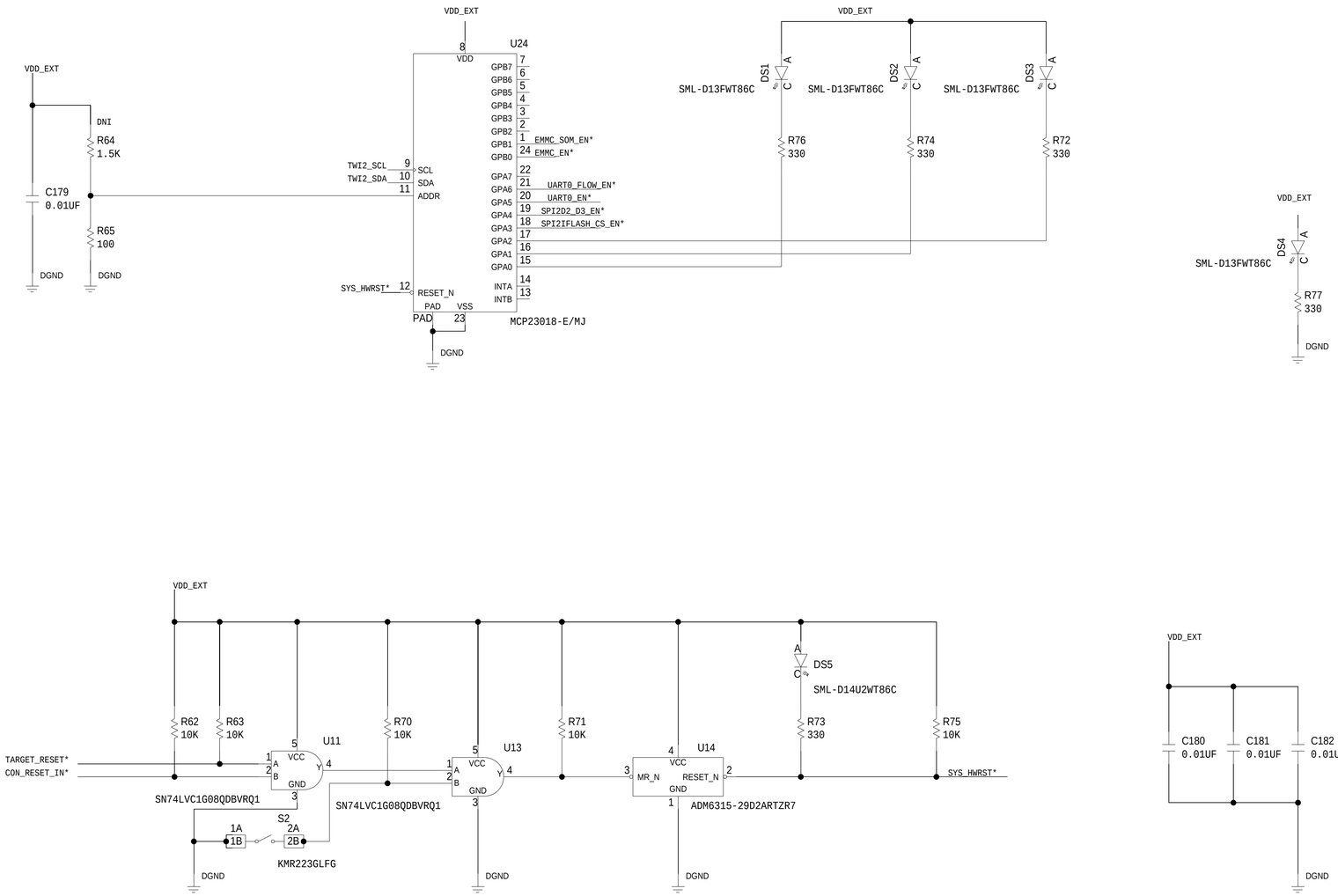

ANALOG DEVICES

THIS DRAWING IS THE PROPERTY OF ANALOG DEVICES INC.
IT IS NOT TO BE REPRODUCED OR COPIED, IN WHOLE OR
IN PART, OR USED IN FURNISHING INFORMATION TO OTHERS,
OR FOR ANY OTHER PURPOSE DETRIMENTAL TO THE INTERESTS
OF ANALOG DEVICES.
THE EQUIPMENT SHOWN HEREON MAY BE PROTECTED BY PATENTS
OWNED OR CONTROLLED BY OWNED ANALOG DEVICES.

SCHEMATIC

HW TYPE : Customer Evaluation Z
Product(s): SC598
: SOM

DESIGN VIEW	DRAWING NO.	REV
<DESIGN_VIEW>	02_066733	D

PTD ENGINEER	SIZE	SCALE	SHEET
D. HARRINGTON	D	1:1	SHEET 11 OF 15

REVISIONS			
REV	DESCRIPTION	DATE	APPROVED

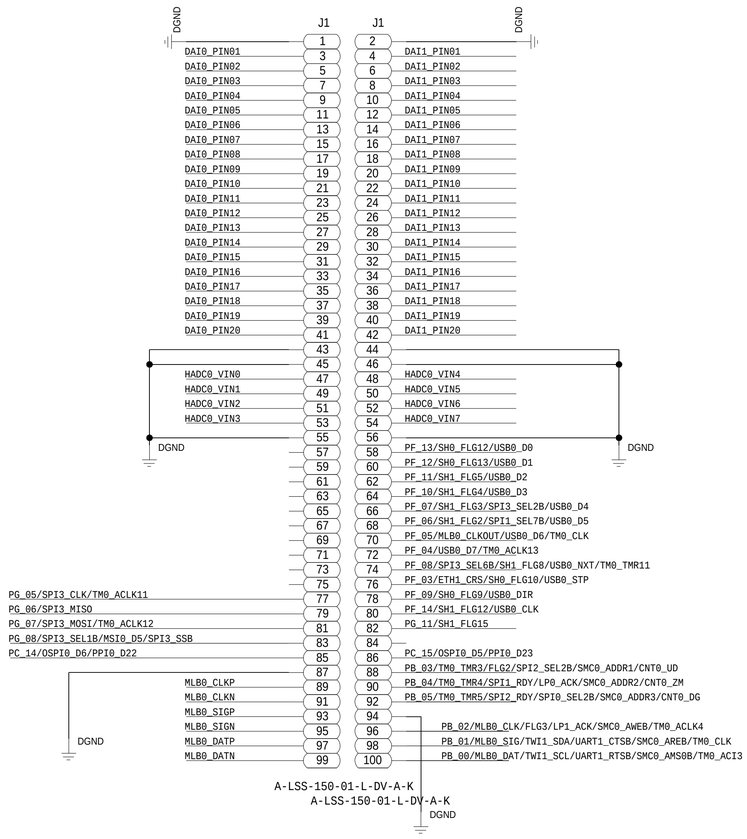

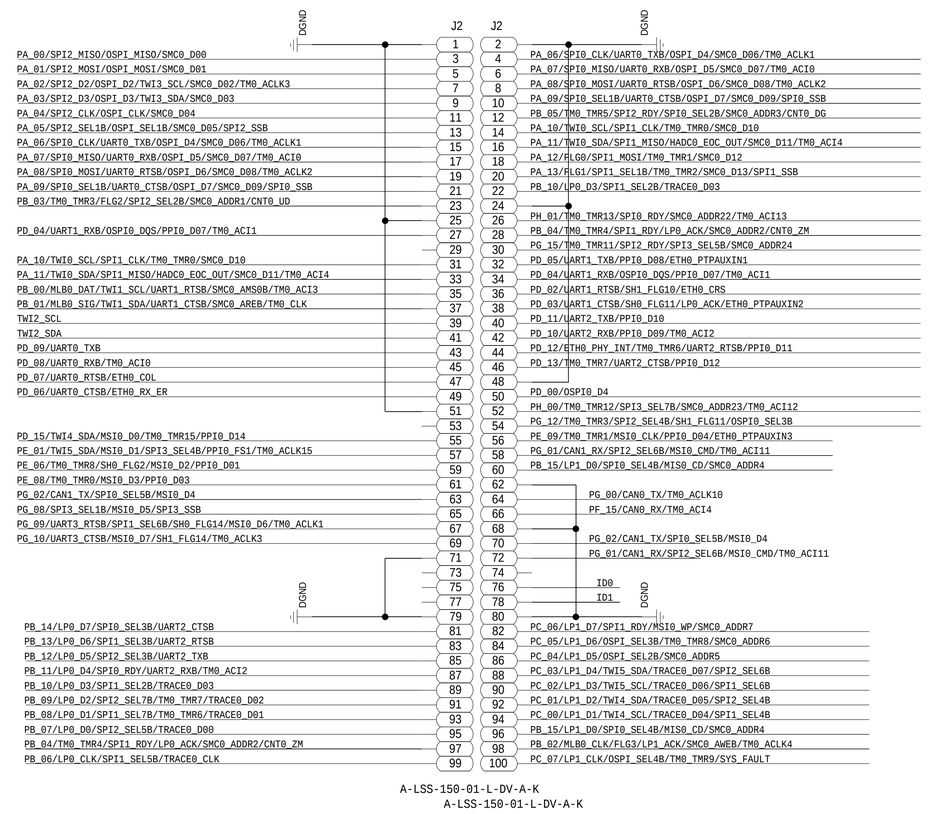

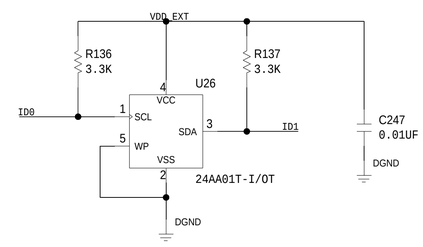

ANALOG DEVICES

THIS DRAWING IS THE PROPERTY OF ANALOG DEVICES INC.
IT IS NOT TO BE REPRODUCED OR COPIED, IN WHOLE OR
IN PART, OR USED IN FURNISHING INFORMATION TO OTHERS,
OR FOR ANY OTHER PURPOSE DETRIMENTAL TO THE INTERESTS
OF ANALOG DEVICES.
THE EQUIPMENT SHOWN HEREON MAY BE PROTECTED BY PATENTS
OWNED OR CONTROLLED BY OWNED ANALOG DEVICES.

SCHEMATIC

HW TYPE : Customer Evaluation Z
Product(s): SC598
: SOM

DESIGN VIEW	DRAWING NO.	REV
<DESIGN_VIEW>	02_066733	D

PTD ENGINEER	SIZE	SCALE	SHEET
D. HARRINGTON	D	1:1	12 OF 15

REVISIONS			
REV	DESCRIPTION	DATE	APPROVED

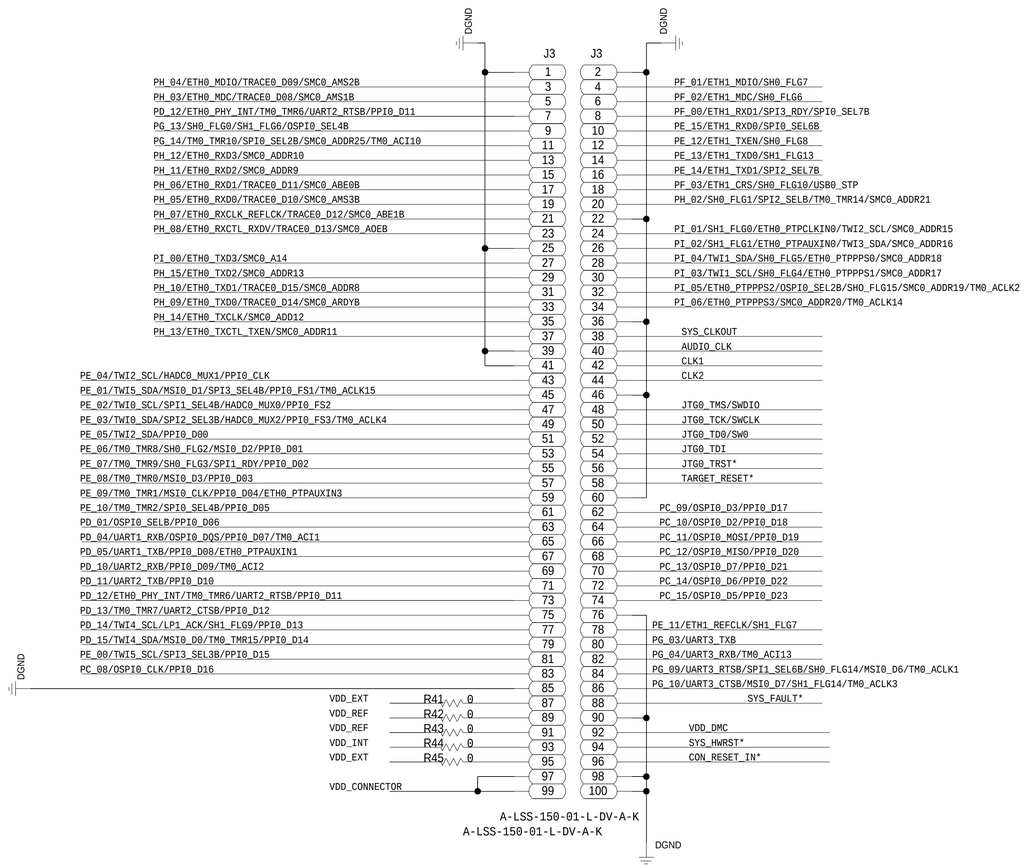

ANALOG DEVICES

THIS DRAWING IS THE PROPERTY OF ANALOG DEVICES INC.
IT IS NOT TO BE REPRODUCED OR COPIED, IN WHOLE OR
IN PART, OR USED IN FURNISHING INFORMATION TO OTHERS,
OR FOR ANY OTHER PURPOSE DETRIMENTAL TO THE INTERESTS
OF ANALOG DEVICES.
THE EQUIPMENT SHOWN HEREON MAY BE PROTECTED BY PATENTS
OWNED OR CONTROLLED BY OWNED ANALOG DEVICES.

SCHEMATIC

HW TYPE : Customer Evaluation Z
Product(s): SC598
: SOM

DESIGN VIEW	DRAWING NO.	REV
<DESIGN_VIEW>	02_066733	D

PTD ENGINEER	SIZE	SCALE	SHEET
D. HARRINGTON	D	1:1	13 OF 15

REVISIONS			
REV	DESCRIPTION	DATE	APPROVED

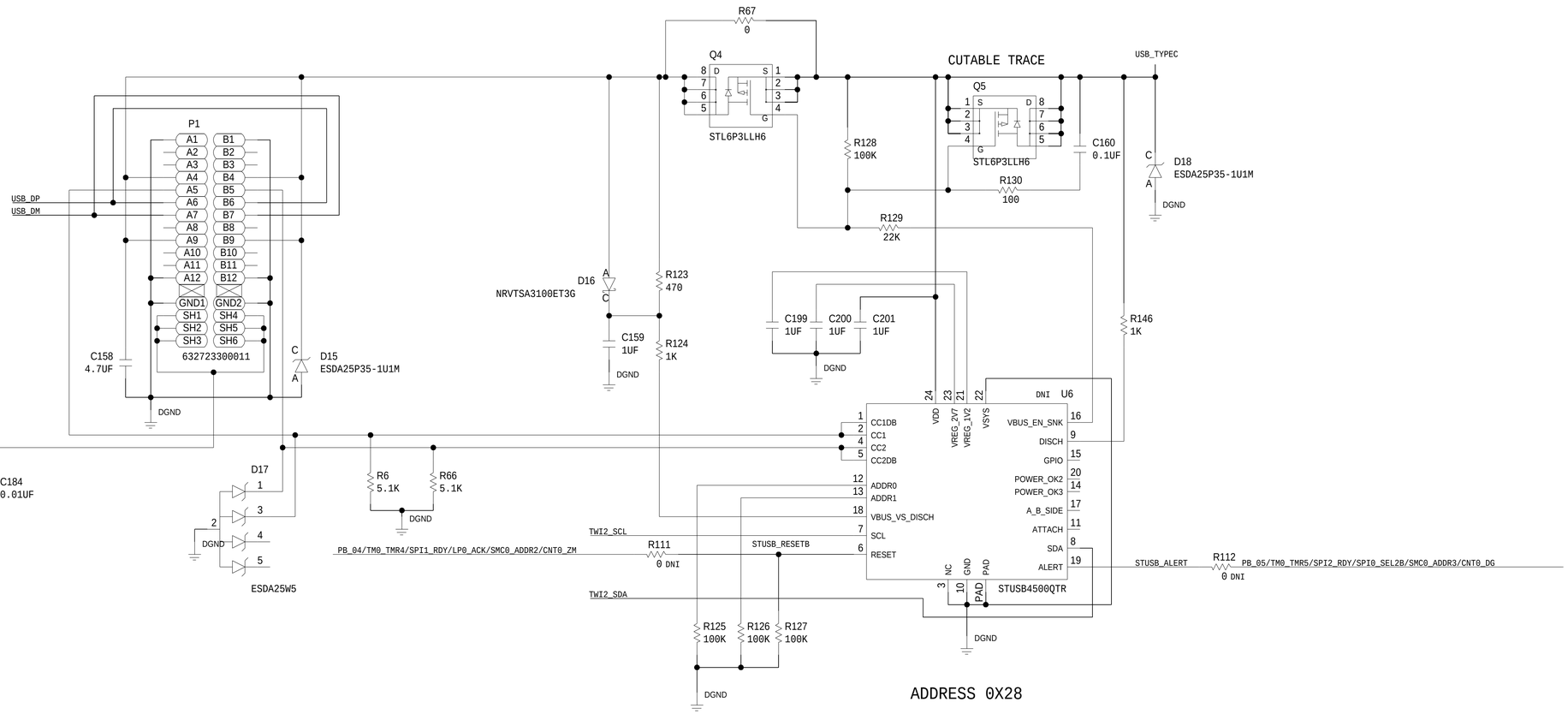

USB PD MODES

5V 3A FIXED MODE - POPULATE R6, R66, R67, DNI U6

DYNAMIC USB PD - DNI R6,R66,R67 POPULATE U6

ANALOG DEVICES

THIS DRAWING IS THE PROPERTY OF ANALOG DEVICES INC.
IT IS NOT TO BE REPRODUCED OR COPIED, IN WHOLE OR
IN PART, OR USED IN FURNISHING INFORMATION TO OTHERS,
OR FOR ANY OTHER PURPOSE DETRIMENTAL TO THE INTERESTS
OF ANALOG DEVICES.
THE EQUIPMENT SHOWN HEREON MAY BE PROTECTED BY PATENTS
OWNED OR CONTROLLED BY OWNED ANALOG DEVICES.

SCHEMATIC

HW TYPE : Customer Evaluation Z
Product(s): SC598
: SOM

DESIGN VIEW	DRAWING NO.	REV
<DESIGN_VIEW>	02_066733	D

PTD ENGINEER	SIZE	SCALE	SHEET
D. HARRINGTON	D	1:1	14 OF 15

REVISIONS			
REV	DESCRIPTION	DATE	APPROVED

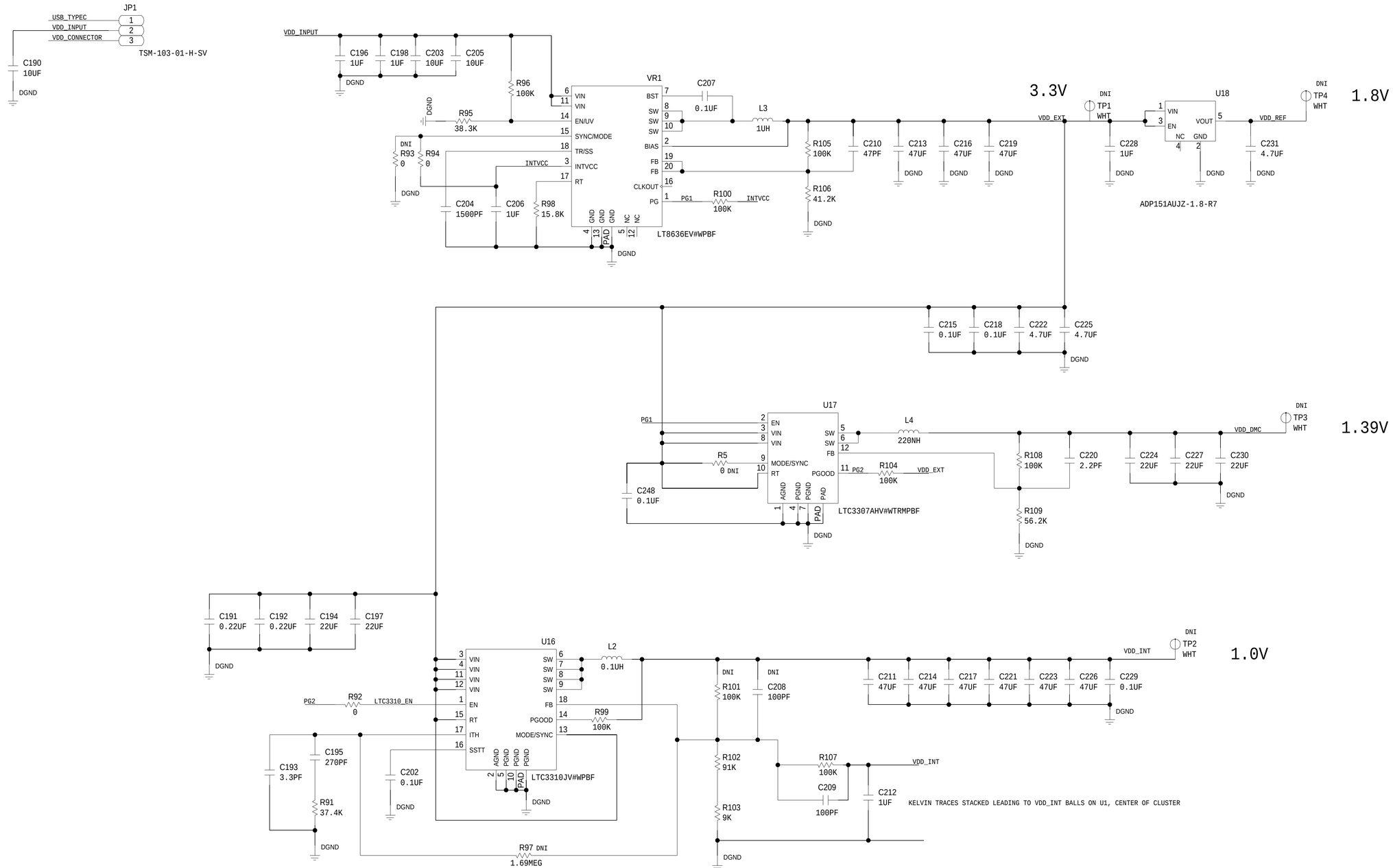

ANALOG DEVICES

THIS DRAWING IS THE PROPERTY OF ANALOG DEVICES INC. IT IS NOT TO BE REPRODUCED OR COPIED, IN WHOLE OR IN PART, OR USED IN FURNISHING INFORMATION TO OTHERS, OR FOR ANY OTHER PURPOSE DETRIMENTAL TO THE INTERESTS OF ANALOG DEVICES. THE EQUIPMENT SHOWN HEREON MAY BE PROTECTED BY PATENTS OWNED OR CONTROLLED BY OWNED ANALOG DEVICES.

SCHEMATIC

HW TYPE : Customer Evaluation Z
Product(s): SC598
: SOM

DESIGN VIEW	DRAWING NO.	REV
<DESIGN_VIEW>	02_066733	D

PTD ENGINEER	SIZE	SCALE	SHEET
D. HARRINGTON	D	1:1	15 OF 15