EV-SOMCRR-EZKIT
Schematic

ANALOG DEVICES
2 Elizabeth Drive
Chelmsford, MA 01824
PH: 1-800-ANALOGD

Title	EZ-Kit SOM Carrier Board Title Block	
Size C	Board No. EV-SOMCRR-EZKIT	Rev D
Date 8/09/2023	Sheet 1 of 19	

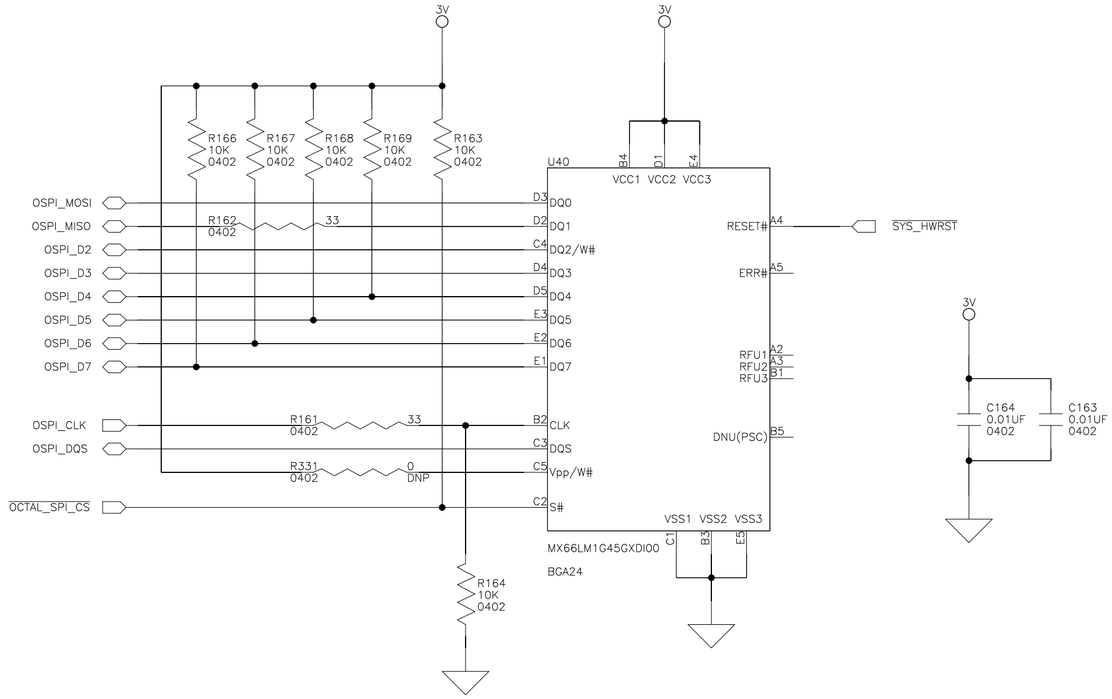

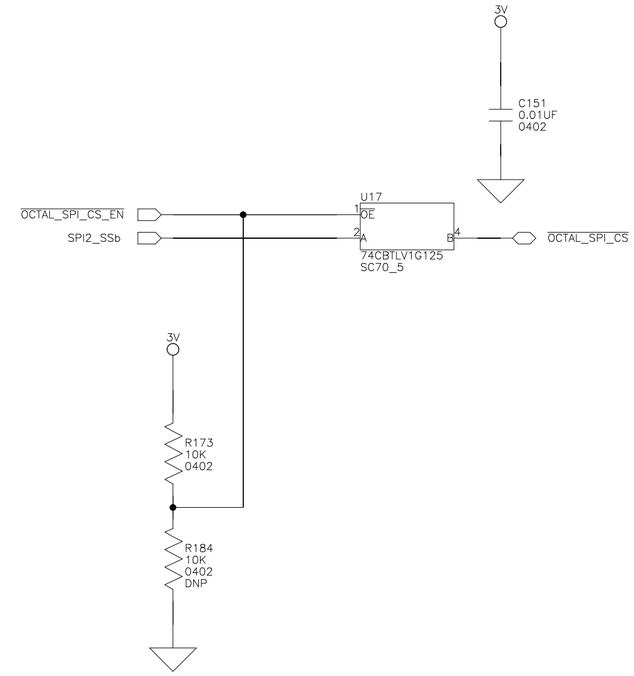

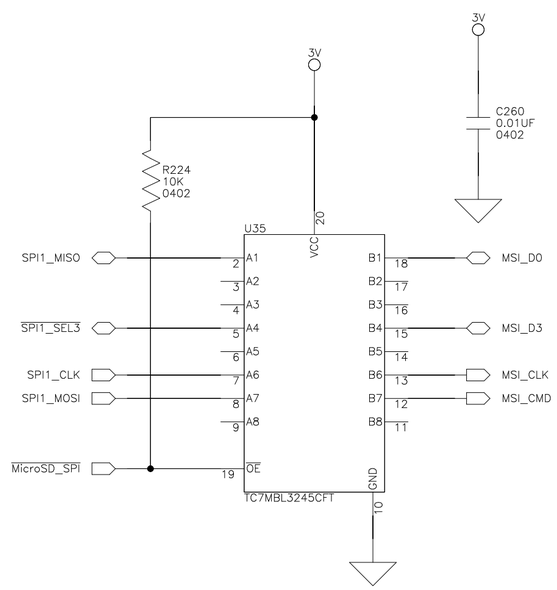

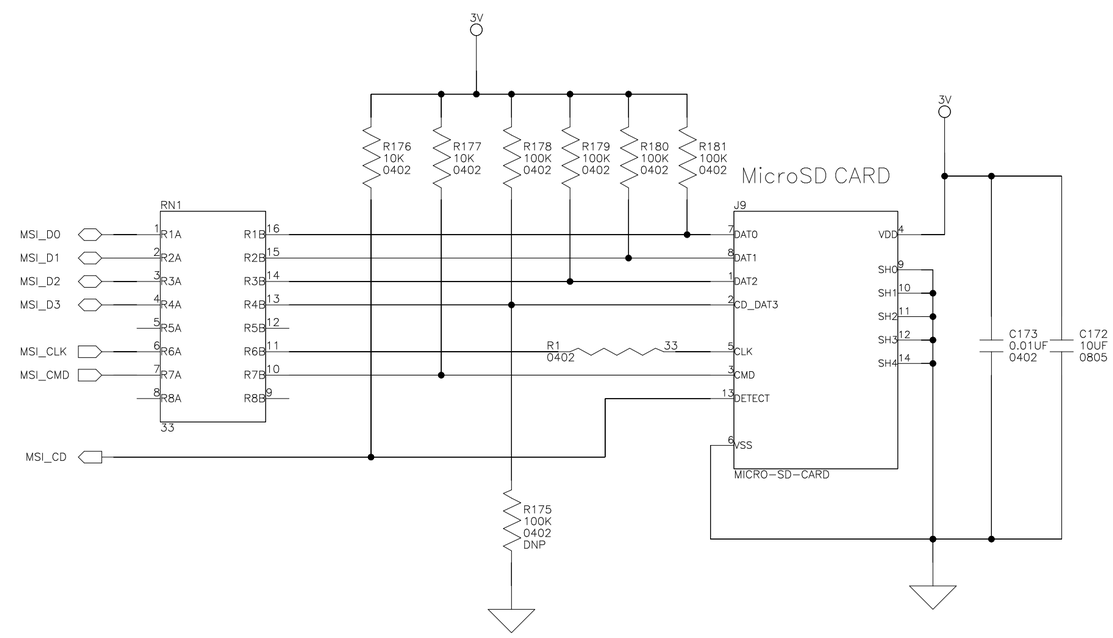

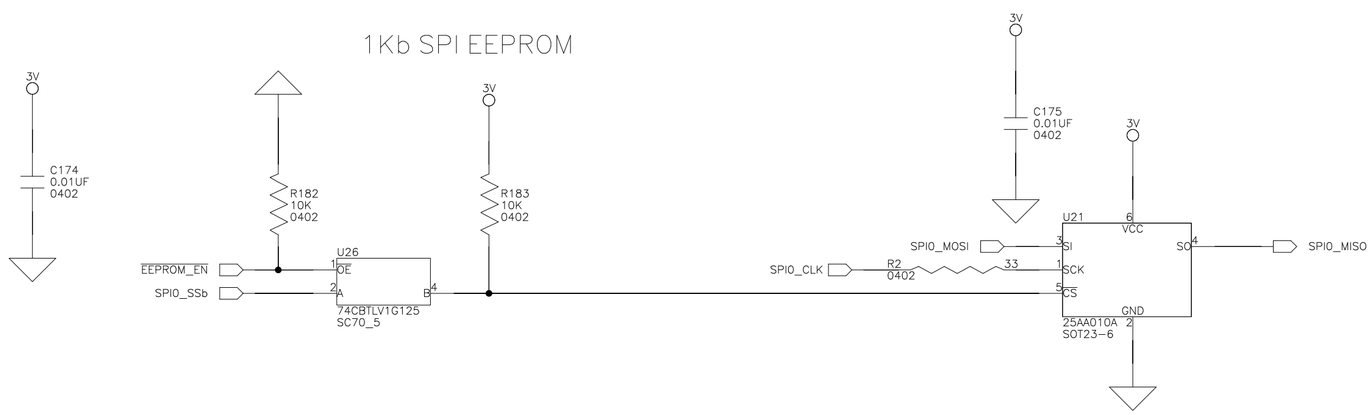

ANALOG DEVICES

2 Elizabeth Drive
Chelmsford, MA 01824
PH: 1-800-ANALOGD

Title	EZ-Kit SOM Carrier Board SPI Flash	
Size C	Board No. EV-SOMCRR-EZKIT	Rev D
Date 8/09/2023	Sheet 2 of 19	

MLB 3/6

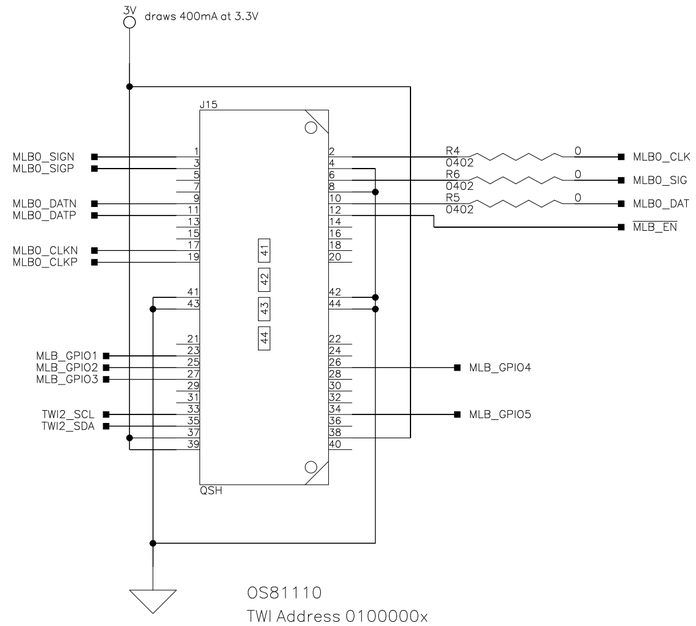

OS81110
TWI Address 0100000x
x is the R/W bit. Read – 1, Write – 0

UART2 Breakout

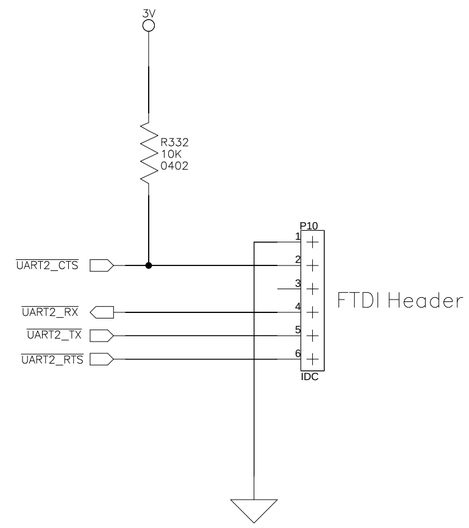

HADC Connectors

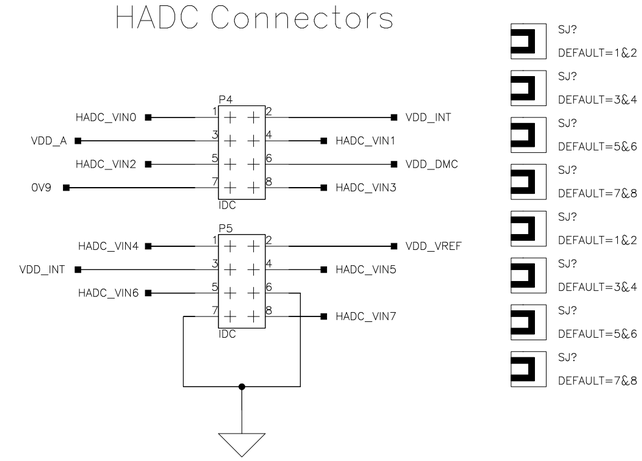

TWI Address 0100010x
x is the R/W bit. Read – 1, Write – 0

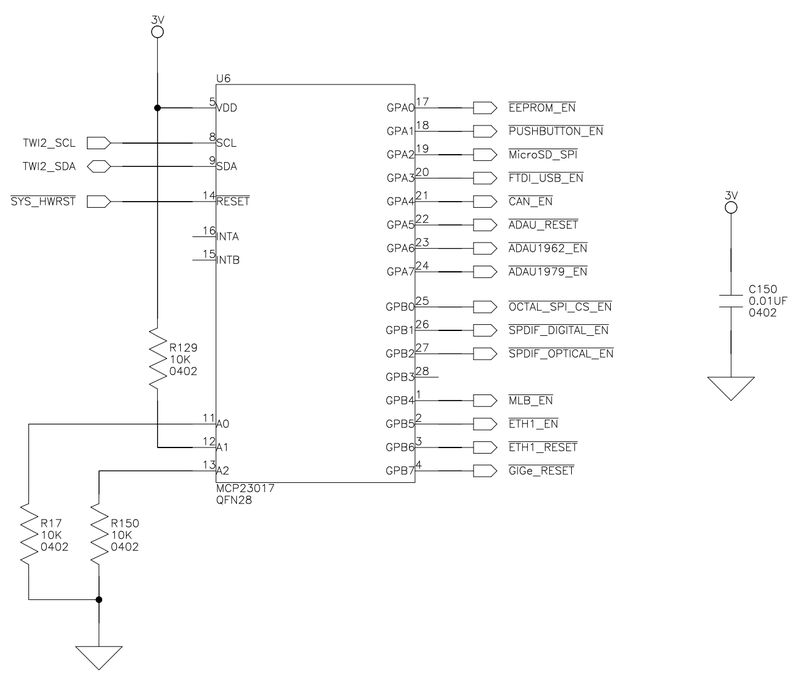

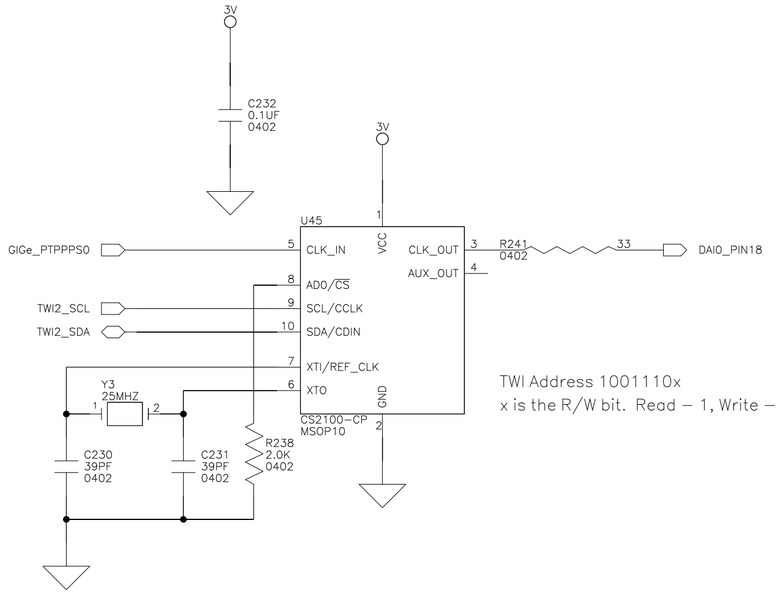

TWI Address 1001110x
x is the R/W bit. Read – 1, Write – 0

ANALOG DEVICES
2 Elizabeth Drive
Chelmsford, MA 01824
PH: 1-800-ANALOGD

Title	EZ-Kit SOM Carrier Board MOST/HADC/Soft Config/UART	
Size C	Board No. EV-SOMCRR-EZKIT	Rev D
Date 8/09/2023	Sheet 3 of 19	

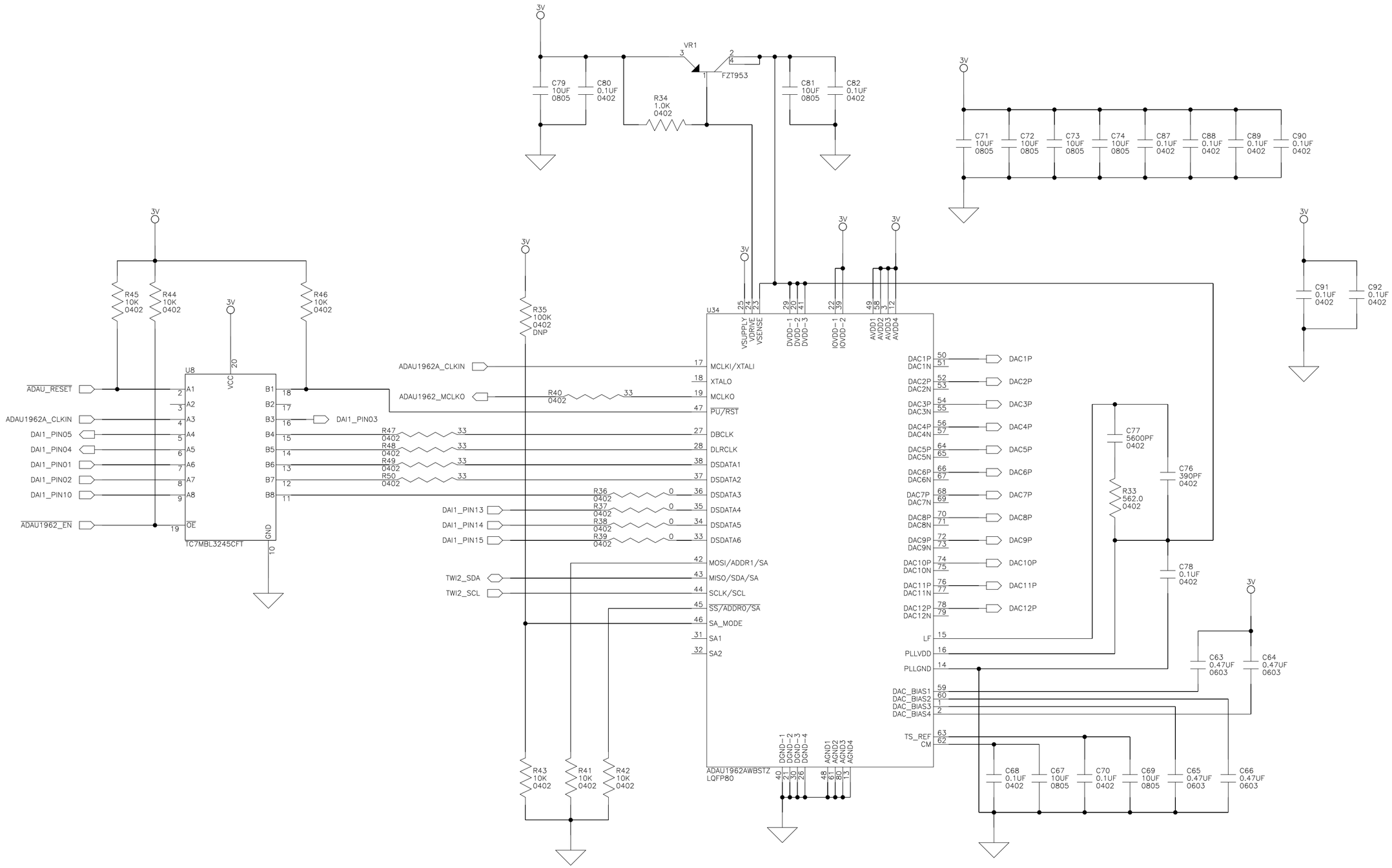

TWI Address 0000100x

x is the R/W bit. Read – 1, Write – 0

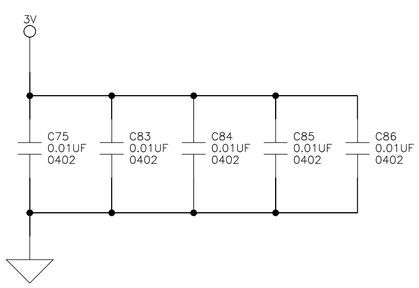

ANALOG DEVICES
2 Elizabeth Drive
Chelmsford, MA 01824
PH: 1–800–ANALOGD

Title	EZ–Kit SOM Carrier Board ADAU1962A	
Size C	Board No. EV–SOMCRR–EZKIT	Rev D
Date 8/09/2023	Sheet 4 of 19	

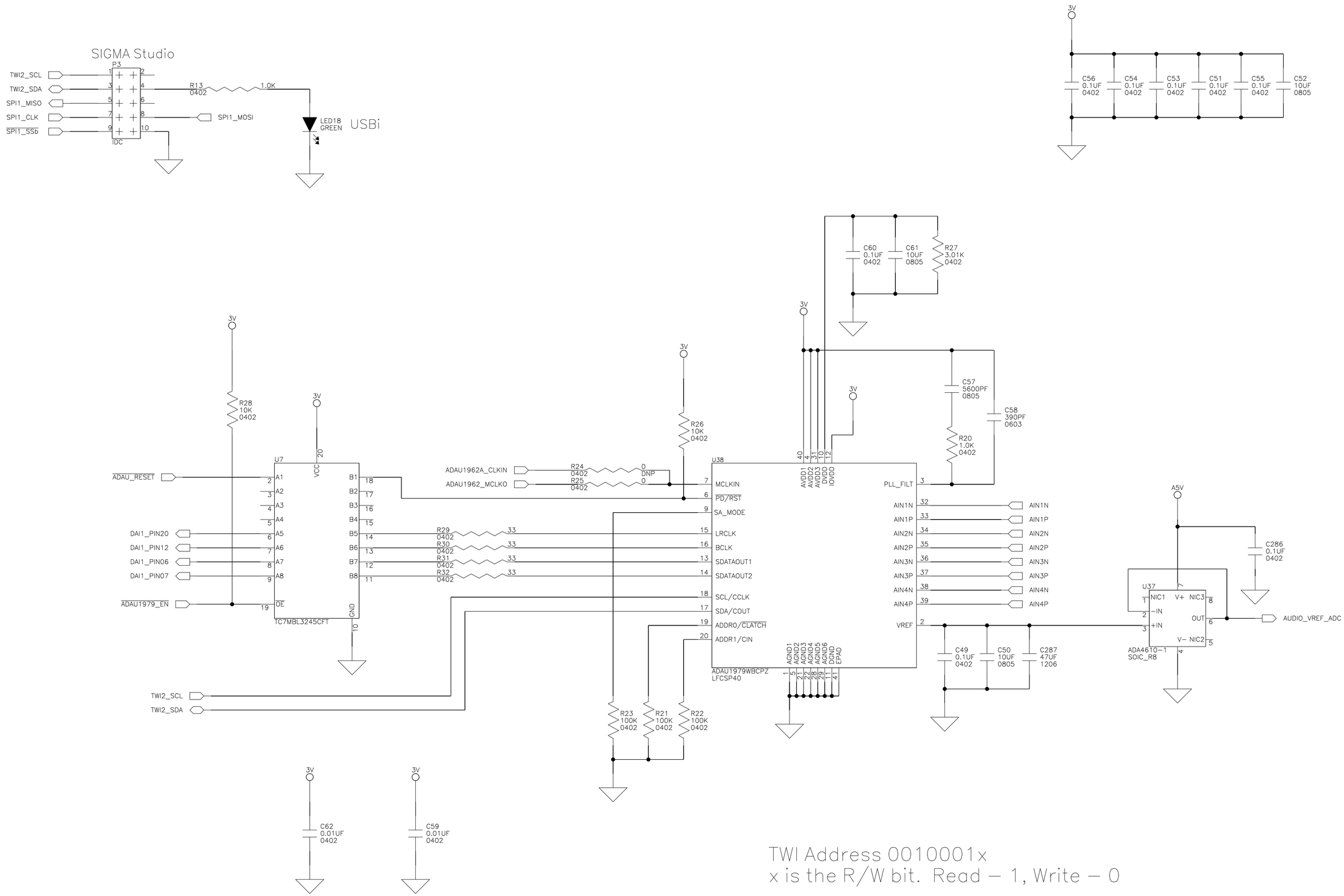

TWI Address 0010001x
x is the R/W bit. Read – 1, Write – 0

ANALOG DEVICES
2 Elizabeth Drive
Chelmsford, MA 01824
PH: 1–800–ANALOGD

Title	EZ–Kit SOM Carrier Board ADAU1979	
Size C	Board No. EV–SOMCRR–EZKIT	Rev D
Date 8/09/2023	Sheet 5 of 19	

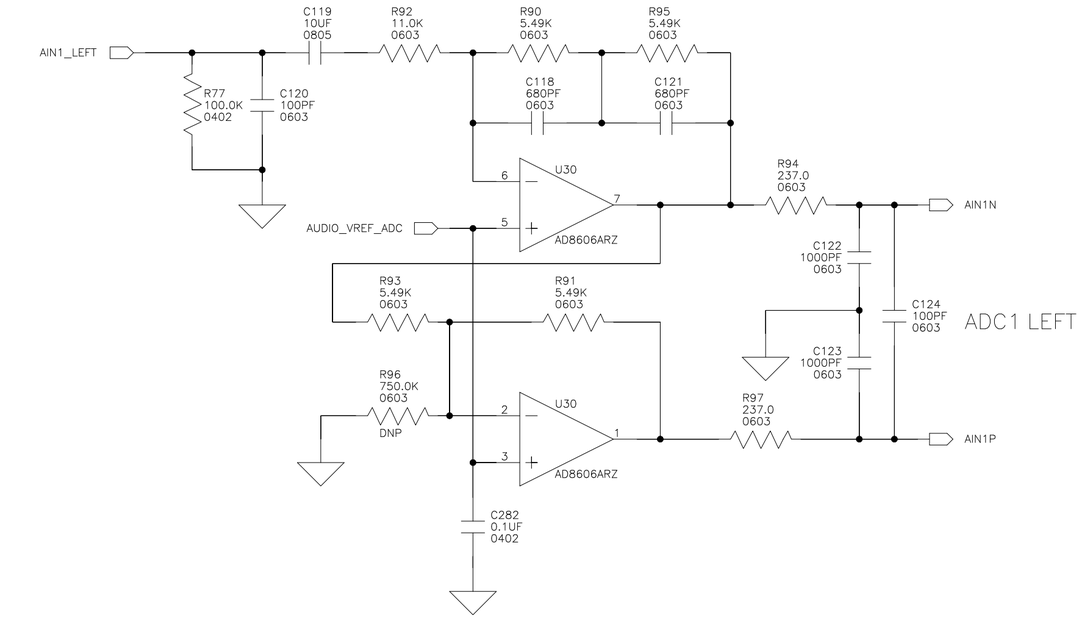

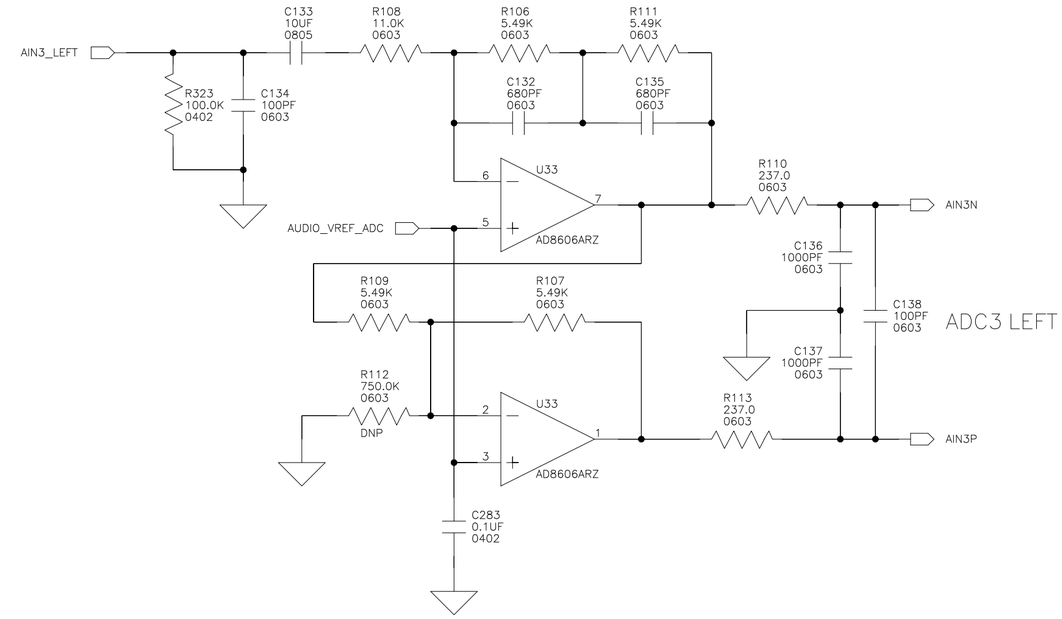

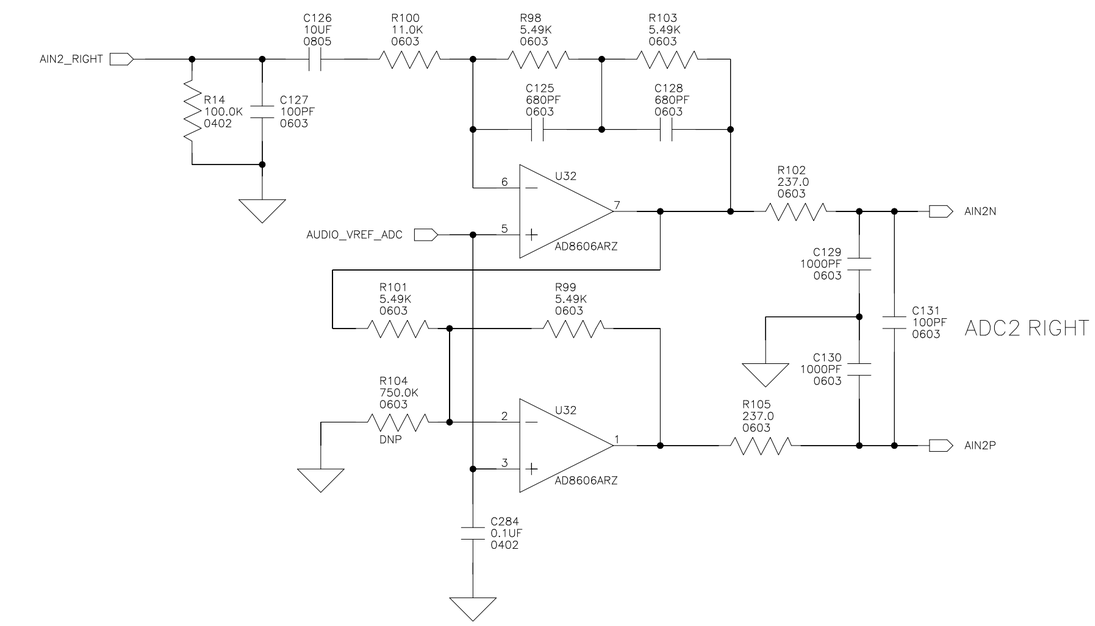

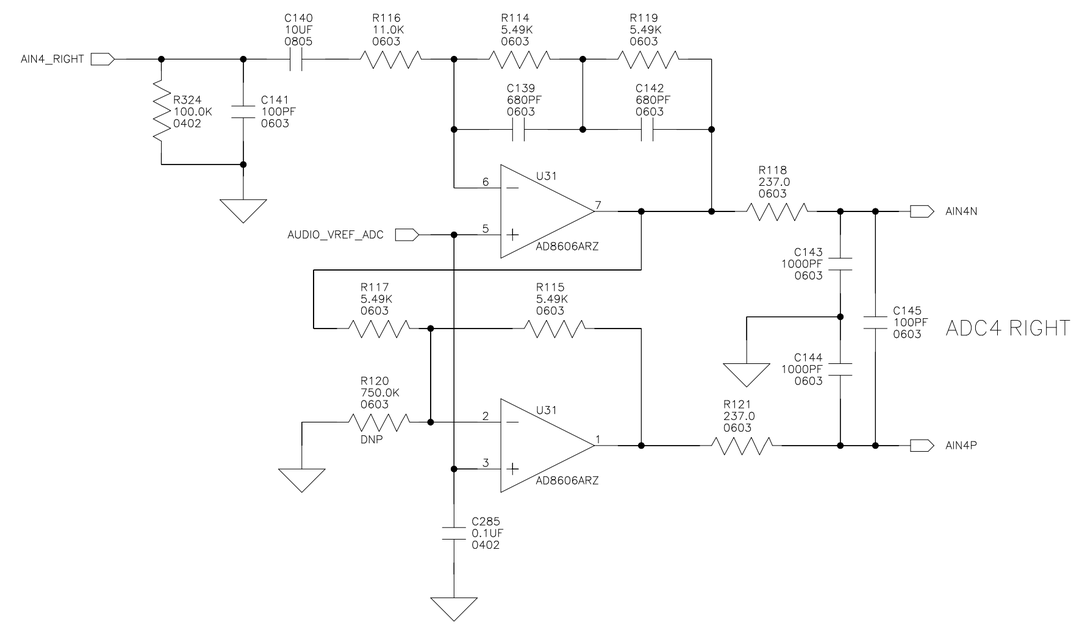

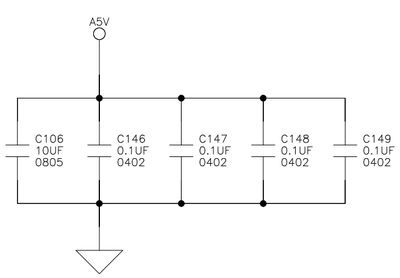

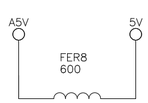

ANALOG DEVICES

2 Elizabeth Drive
Chelmsford, MA 01824
PH: 1–800–ANALOGD

Title	EZ–Kit SOM Carrier Board Audio Input	
Size C	Board No. EV–SOMCRR–EZKIT	Rev D
Date 8/09/2023	Sheet 6 of 19	

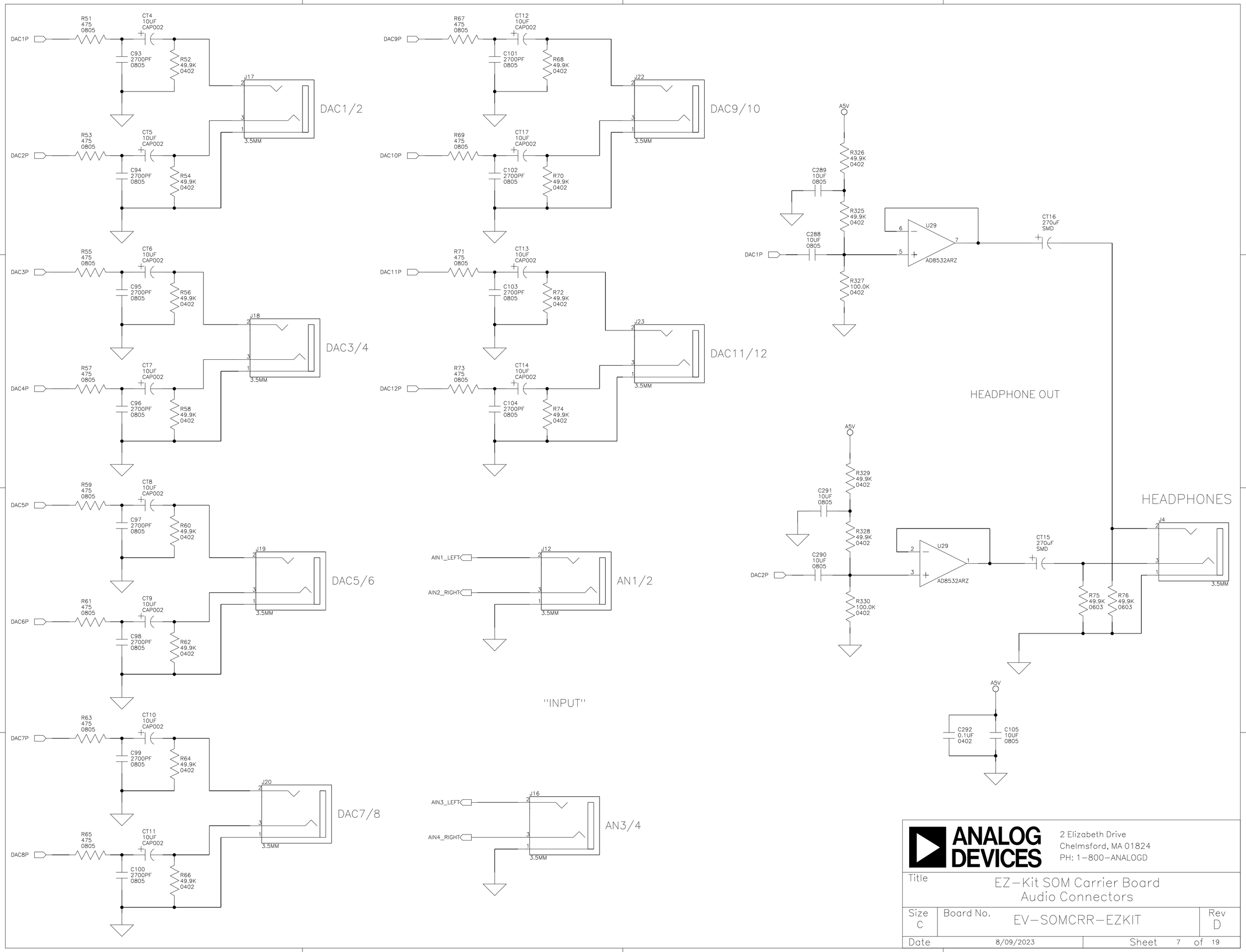

ANALOG DEVICES

2 Elizabeth Drive
Chelmsford, MA 01824
PH: 1-800-ANALOGD

Title	EZ-Kit SOM Carrier Board Audio Connectors	
Size C	Board No. EV-SOMCRR-EZKIT	Rev D
Date 8/09/2023	Sheet 7 of 19	

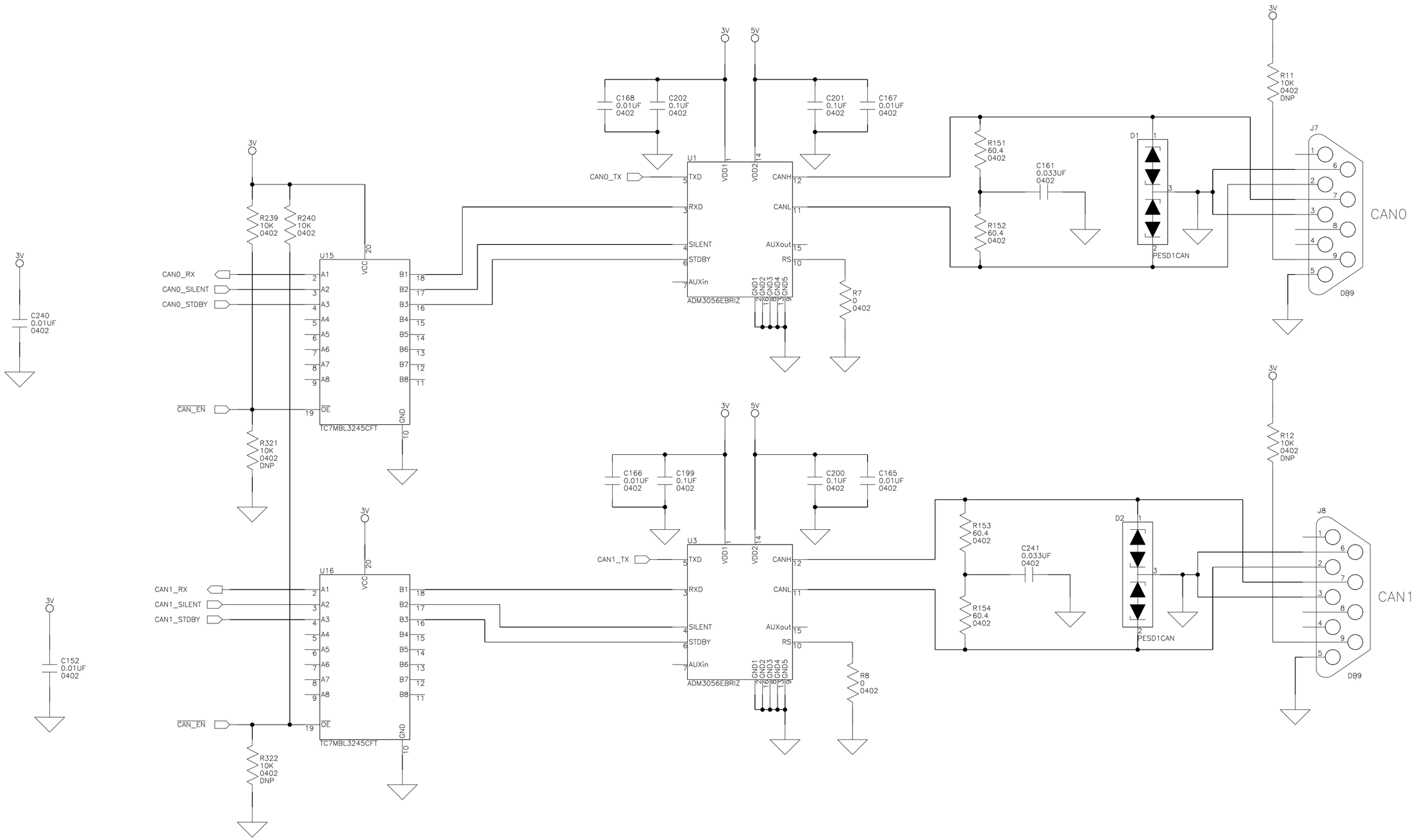

ANALOG DEVICES

2 Elizabeth Drive
Chelmsford, MA 01824
PH: 1-800-ANALOGD

Title	EZ-Kit SOM Carrier Board CAN	
Size C	Board No. EV-SOMCRR-EZKIT	Rev D
Date 8/09/2023	Sheet 8 of 19	

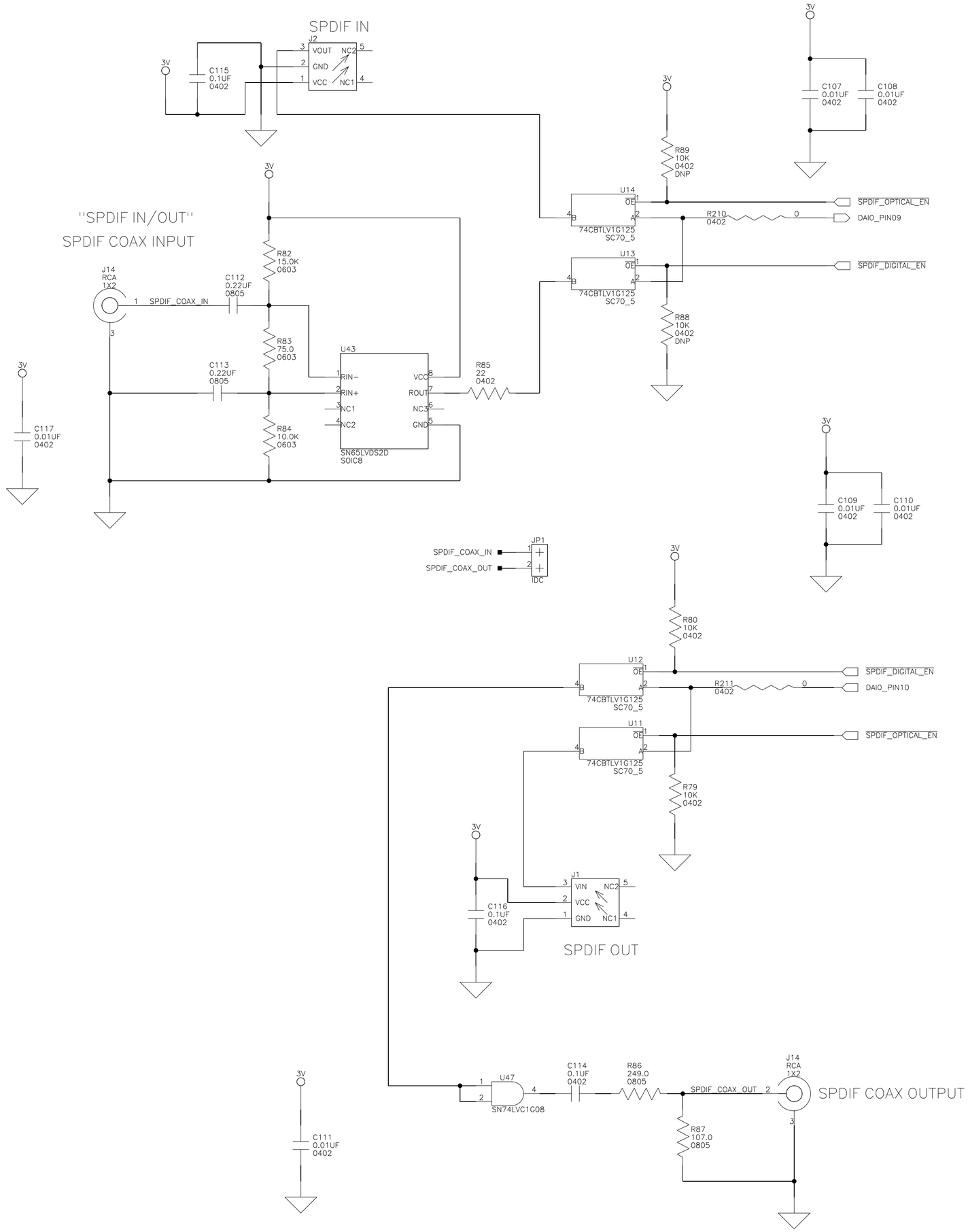

ANALOG DEVICES

2 Elizabeth Drive
Chelmsford, MA 01824
PH: 1−800−ANALOGD

Title	EZ−Kit SOM Carrier Board SPDIF	
Size C	Board No. EV−SOMCRR−EZKIT	Rev D
Date 8/09/2023	Sheet 9 of 19	

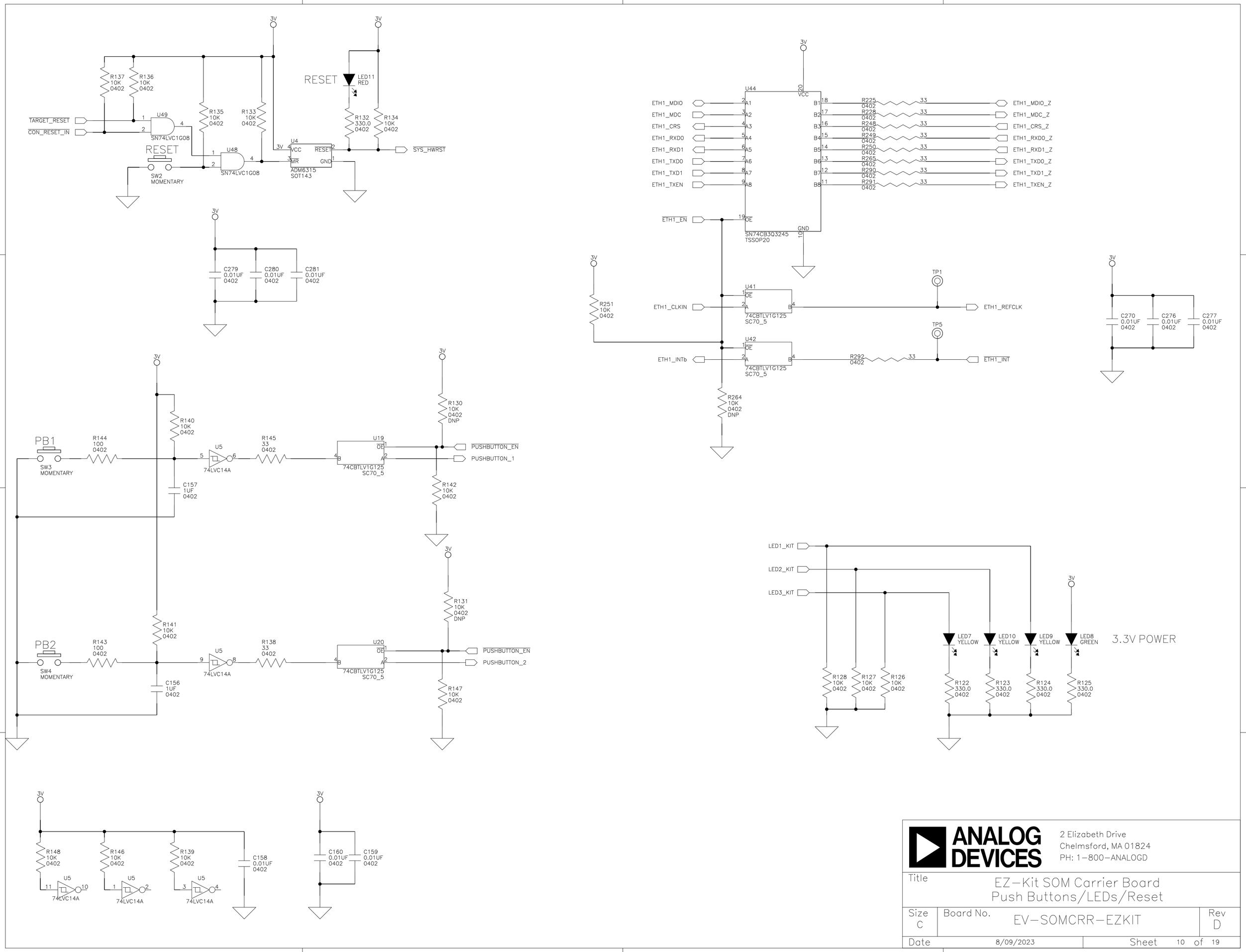

ANALOG DEVICES

2 Elizabeth Drive
Chelmsford, MA 01824
PH: 1-800-ANALOGD

Title	EZ-Kit SOM Carrier Board Push Buttons/LEDs/Reset	
Size C	Board No. EV-SOMCRR-EZKIT	Rev D
Date 8/09/2023	Sheet 10 of 19	

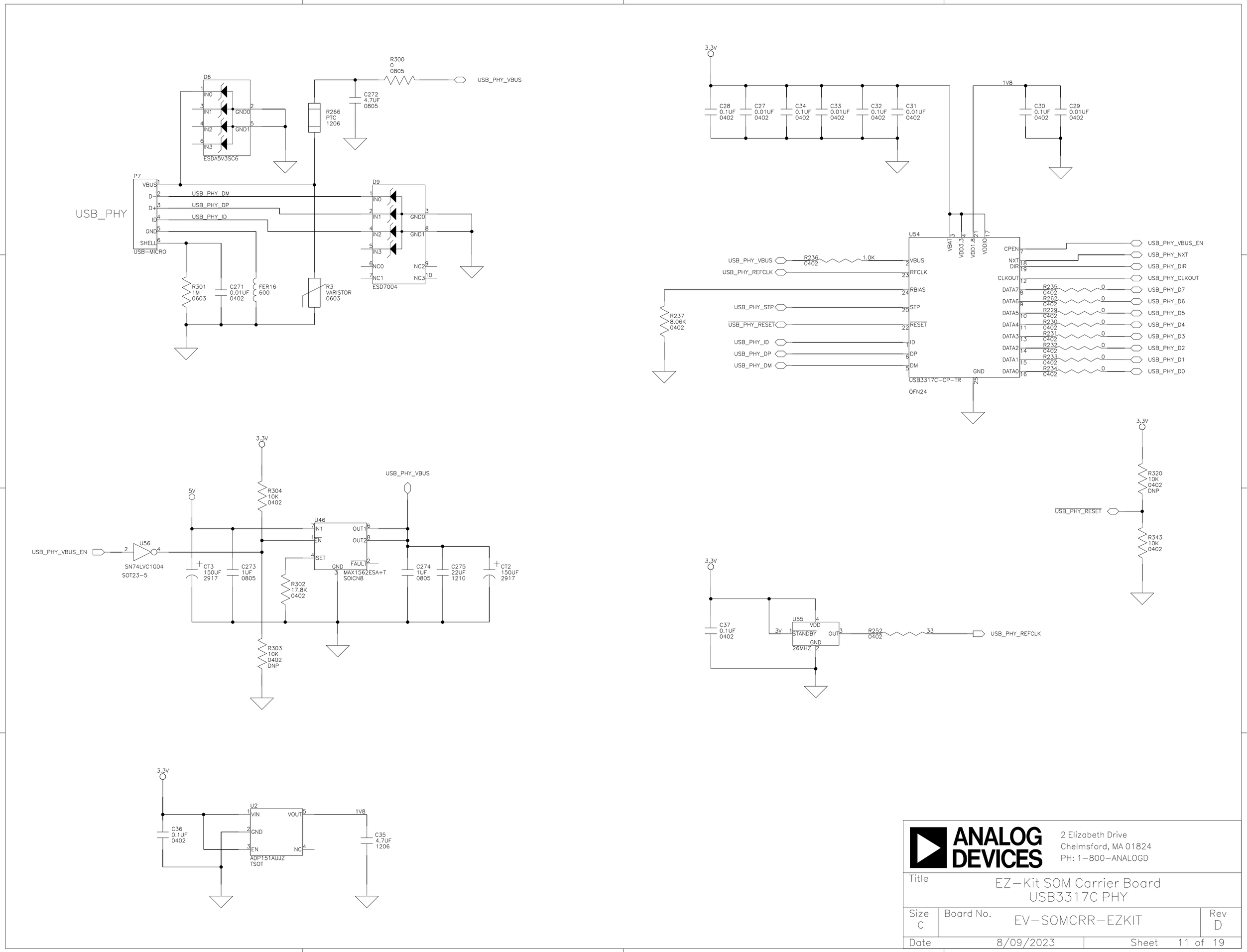

ANALOG DEVICES

2 Elizabeth Drive
Chelmsford, MA 01824
PH: 1-800-ANALOGD

Title	EZ-Kit SOM Carrier Board USB3317C PHY	
Size C	Board No. EV-SOMCRR-EZKIT	Rev D
Date 8/09/2023	Sheet 11 of 19	

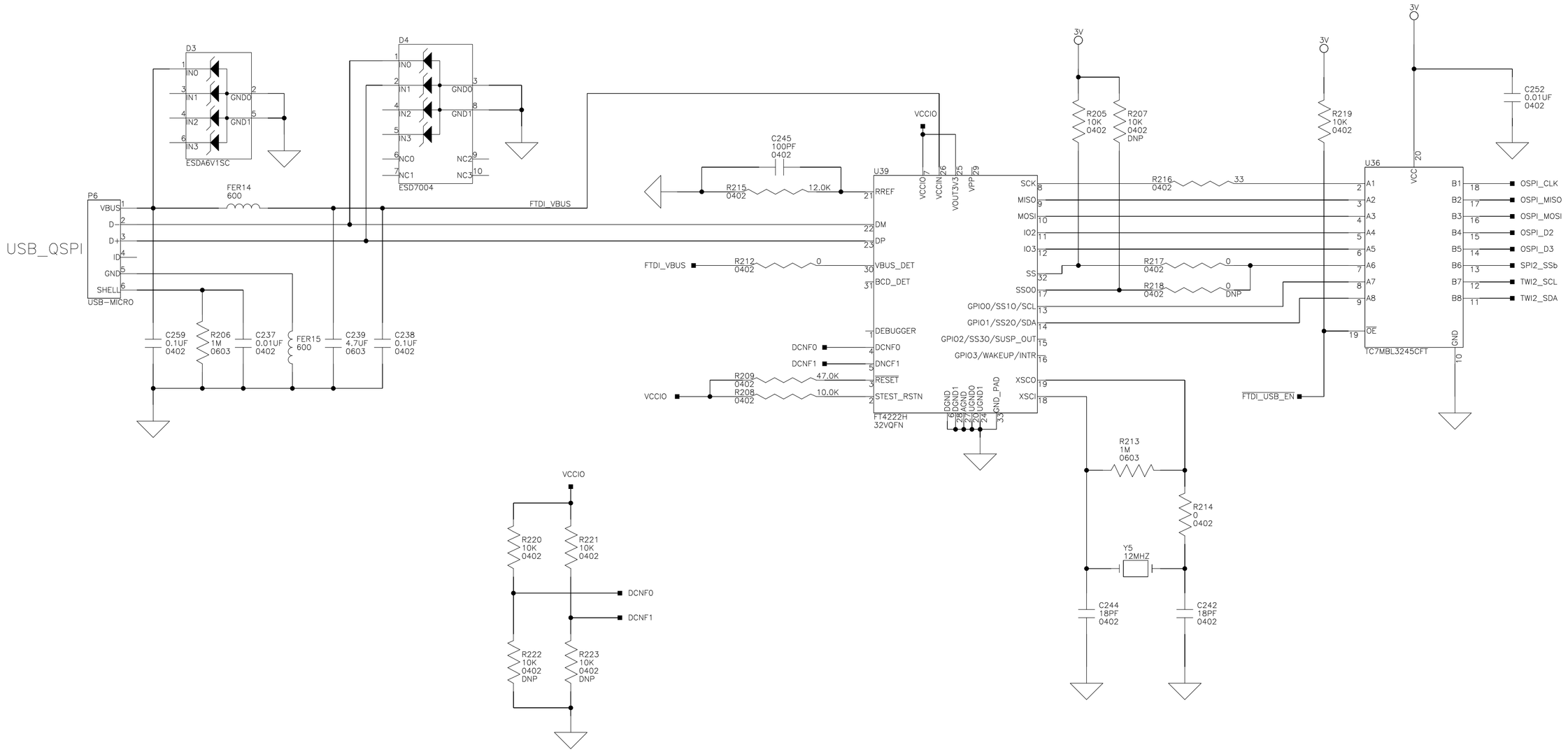

ANALOG DEVICES

2 Elizabeth Drive
Chelmsford, MA 01824
PH: 1-800-ANALOGD

Title	EZ-Kit SOM Carrier Board USB QSPI	
Size C	Board No. EV-SOMCRR-EZKIT	Rev D
Date 8/09/2023	Sheet 12 of 19	

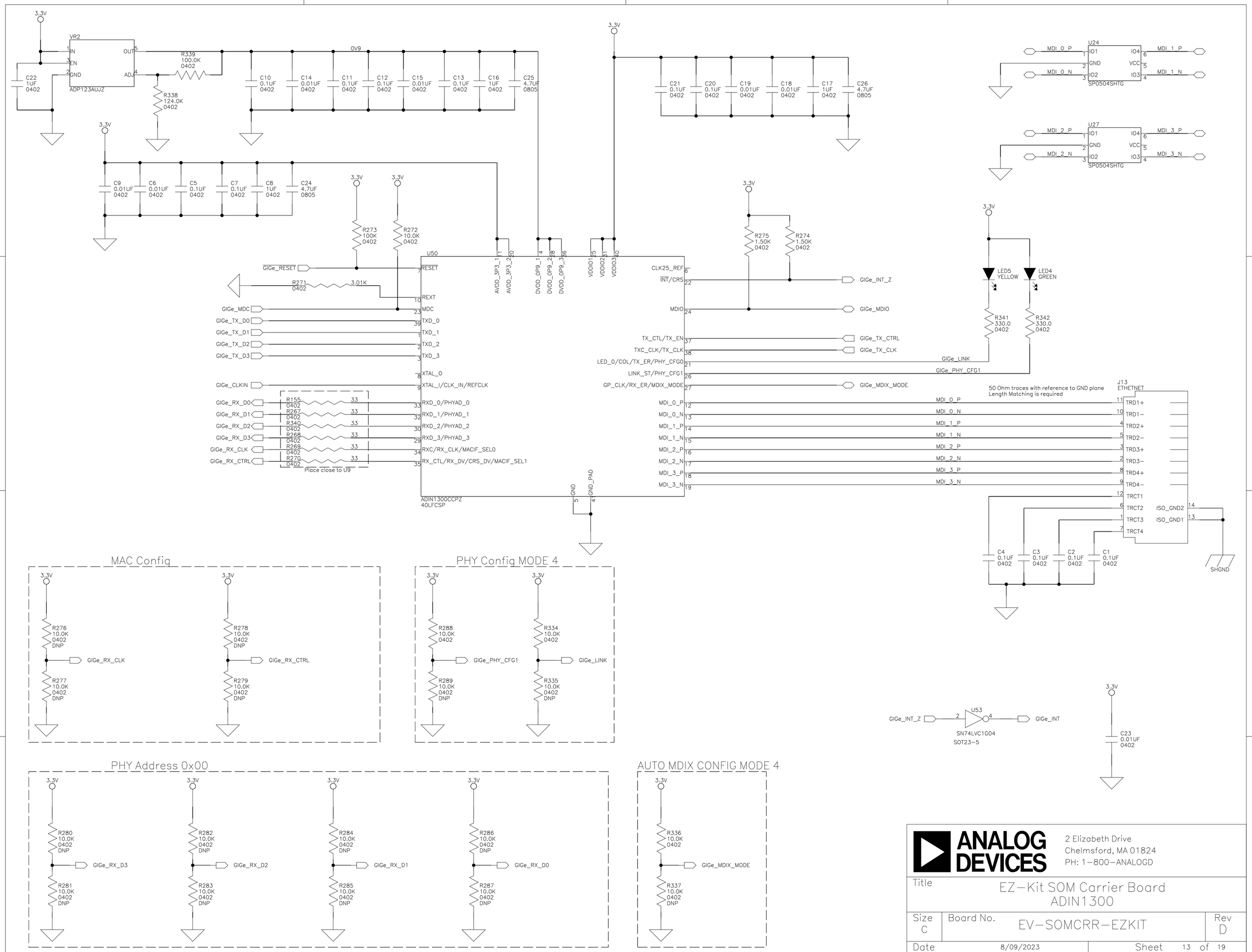

ANALOG DEVICES

2 Elizabeth Drive
Chelmsford, MA 01824
PH: 1-800-ANALOGD

Title	EZ-Kit SOM Carrier Board ADIN1300	
Size C	Board No. EV-SOMCRR-EZKIT	Rev D
Date 8/09/2023	Sheet 13 of 19	

RMII Mode

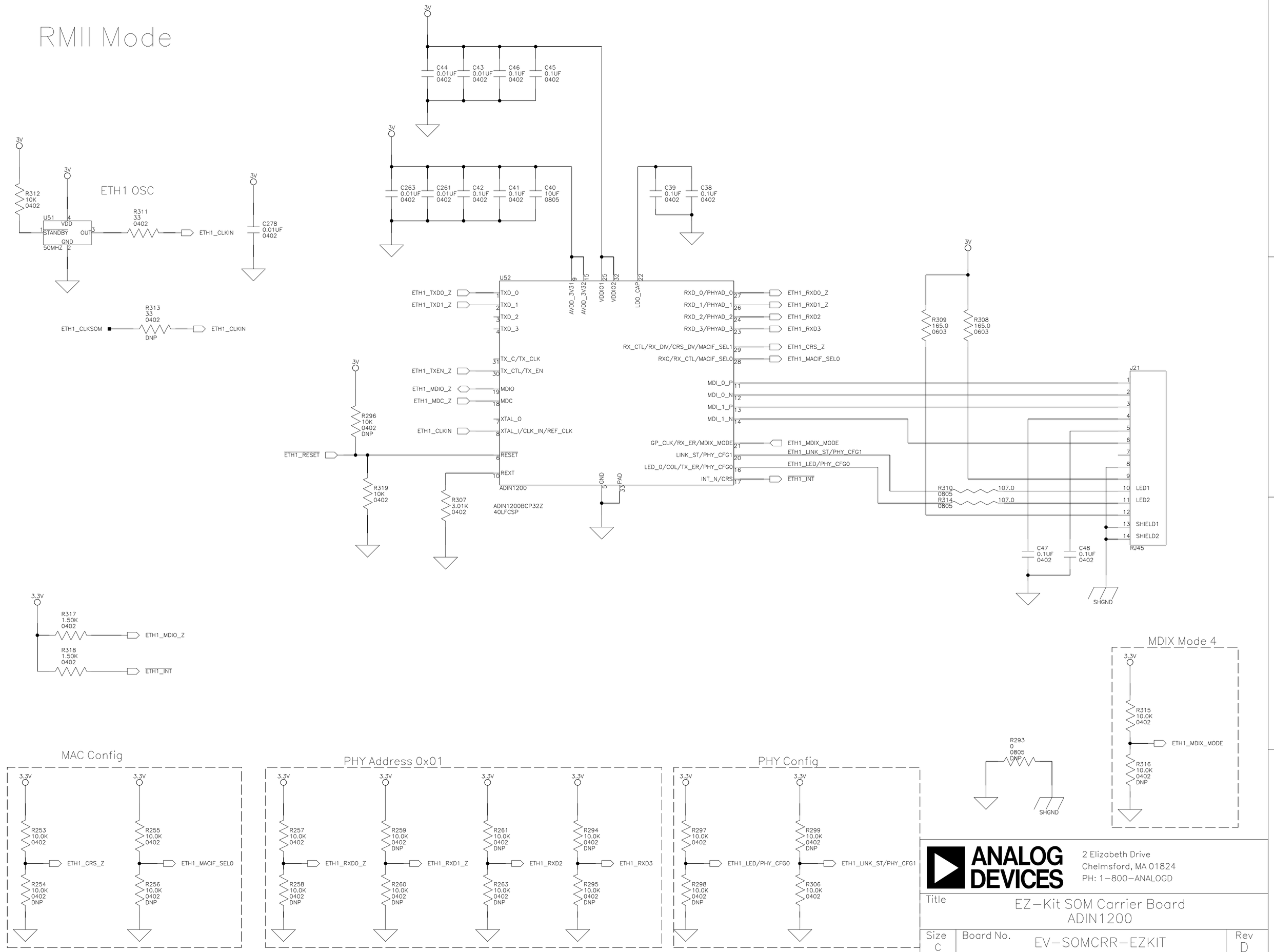

ANALOG DEVICES

2 Elizabeth Drive
Chelmsford, MA 01824
PH: 1-800-ANALOGD

Title	EZ-Kit SOM Carrier Board ADIN1200	
Size C	Board No. EV-SOMCRR-EZKIT	Rev D
Date 8/09/2023	Sheet 14 of 19	

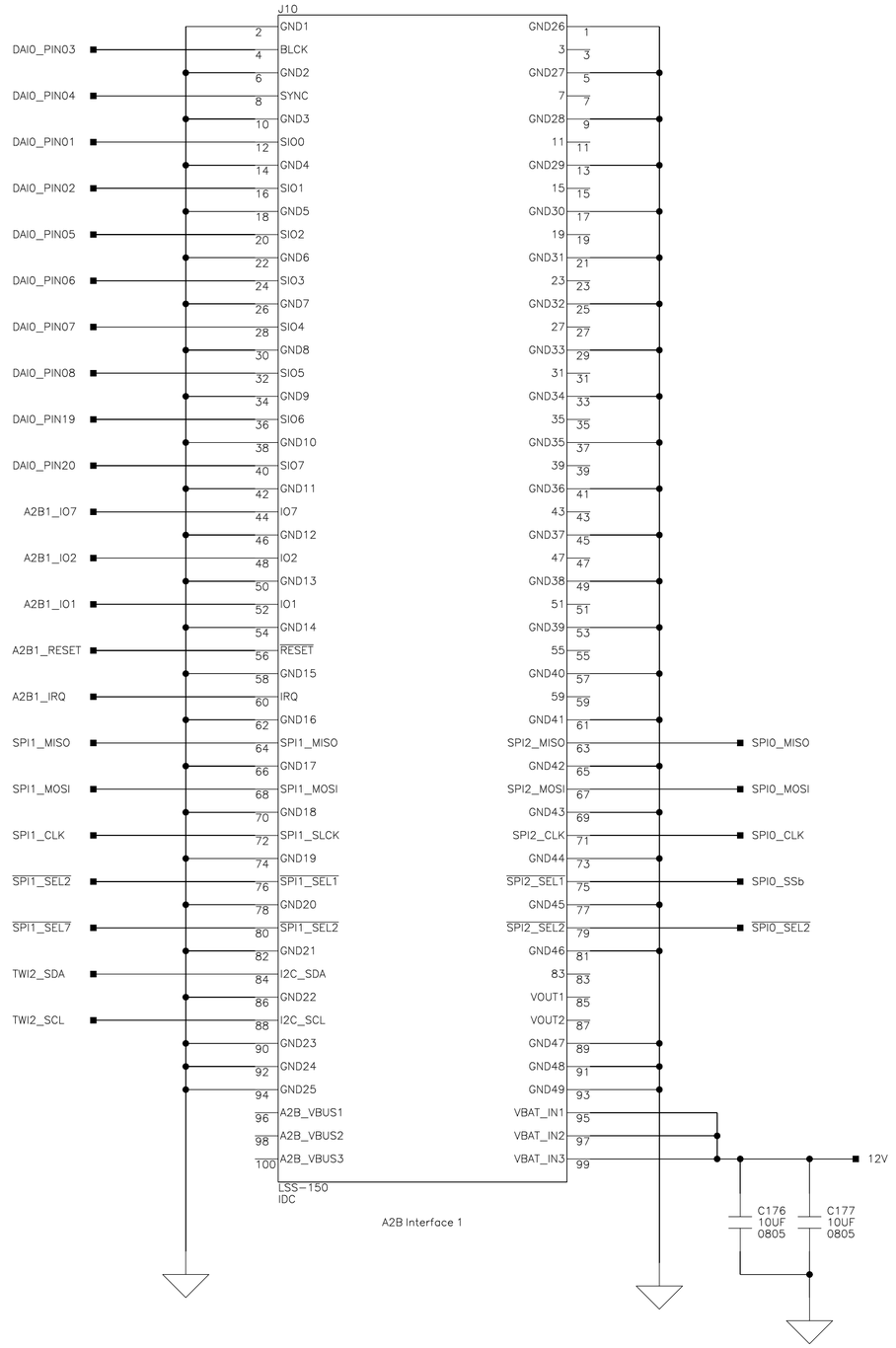

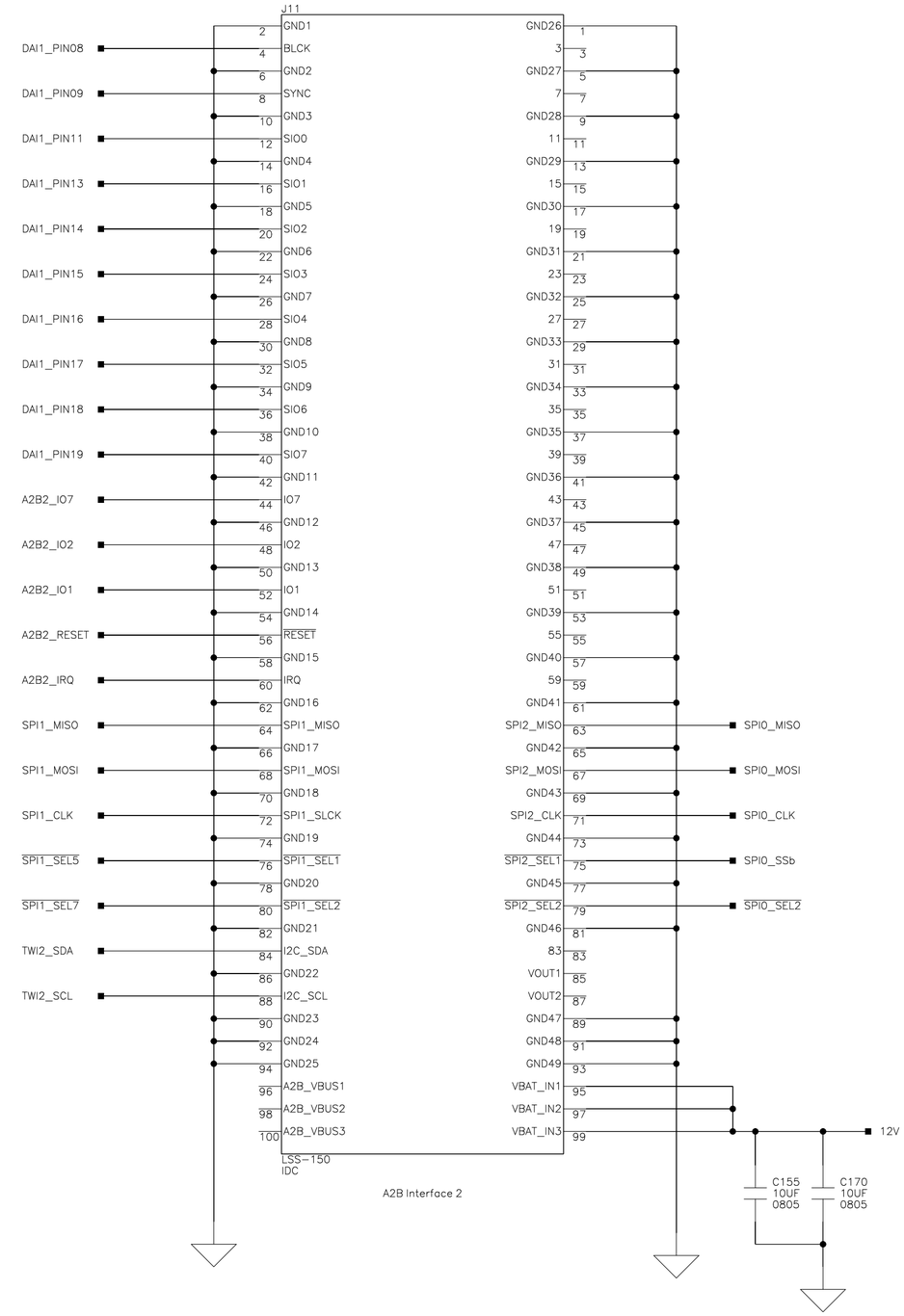

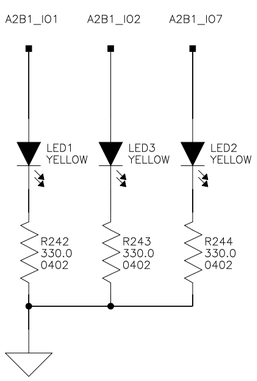

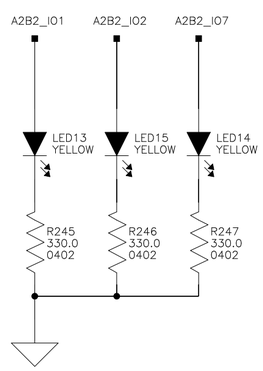

ANALOG DEVICES
2 Elizabeth Drive
Chelmsford, MA 01824
PH: 1-800-ANALOGD

Title	EZ-Kit SOM Carrier Board A2B Interface	
Size C	Board No. EV-SOMCRR-EZKIT	Rev D
Date 8/09/2023	Sheet 15 of 19	

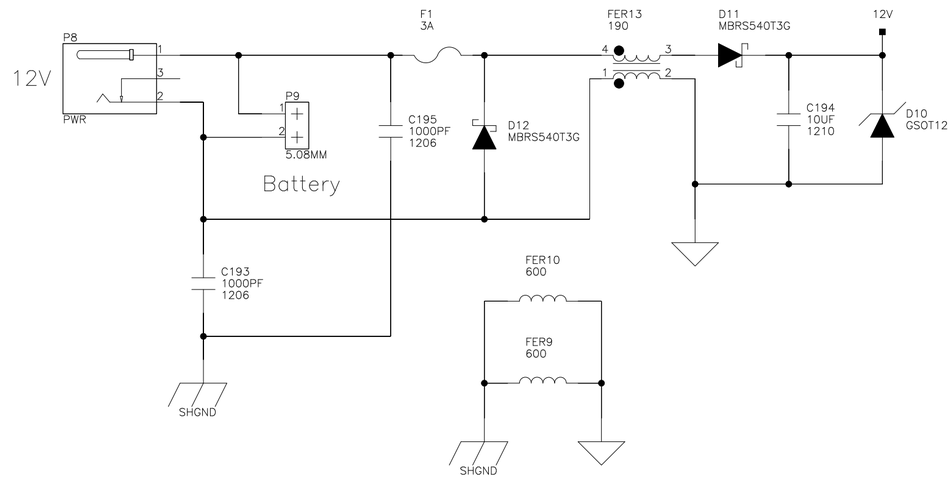

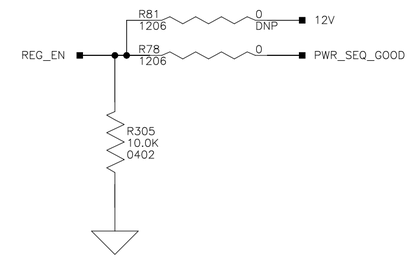

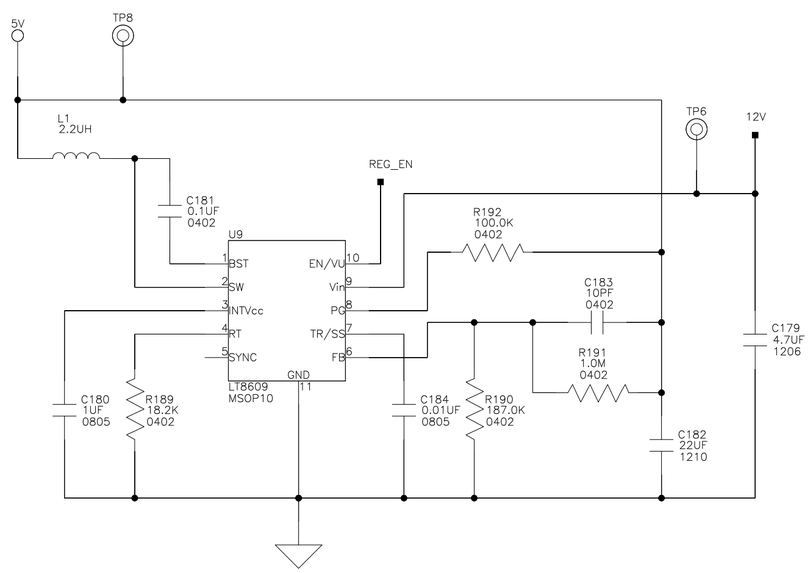

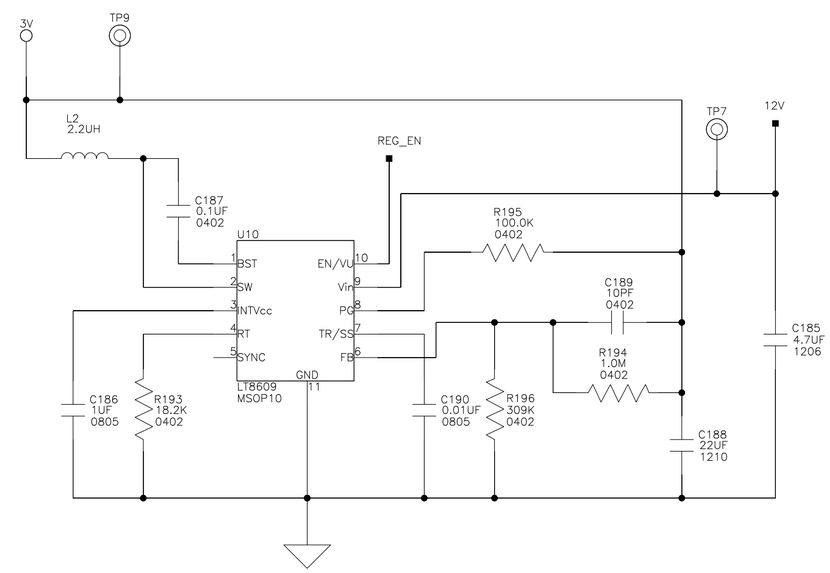

ANALOG DEVICES
2 Elizabeth Drive
Chelmsford, MA 01824
PH: 1–800–ANALOGD

Title	EZ–Kit SOM Carrier Board Power	
Size C	Board No. EV–SOMCRR–EZKIT	Rev D
Date 8/09/2023	Sheet 16 of 19	

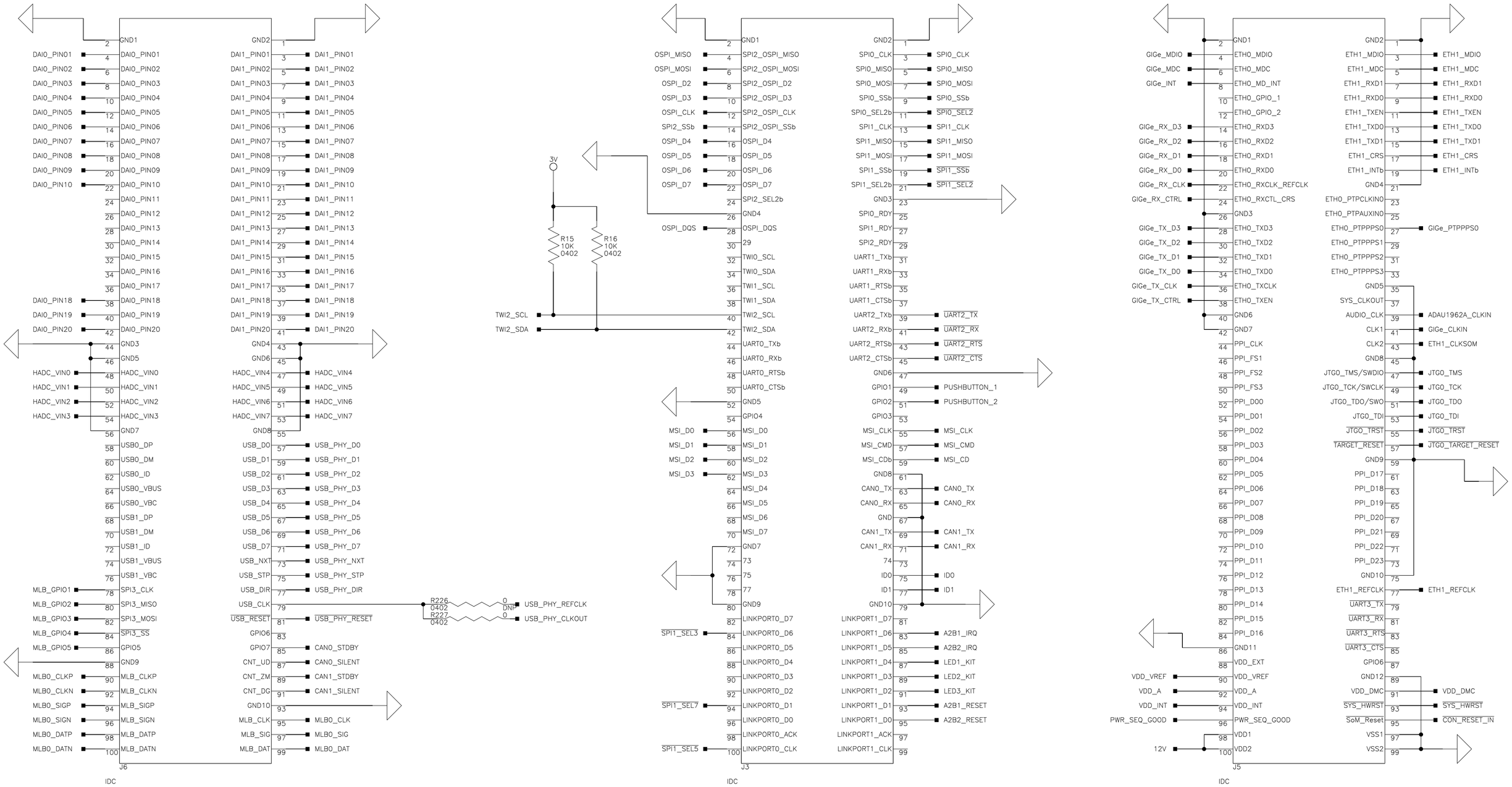

ANALOG DEVICES

2 Elizabeth Drive
Chelmsford, MA 01824
PH: 1–800–ANALOGD

Title	EZ–Kit SOM Carrier Board High Speed Connectors	
Size C	Board No. EV–SOMCRR–EZKIT	Rev D
Date 8/09/2023	Sheet 17 of 19	

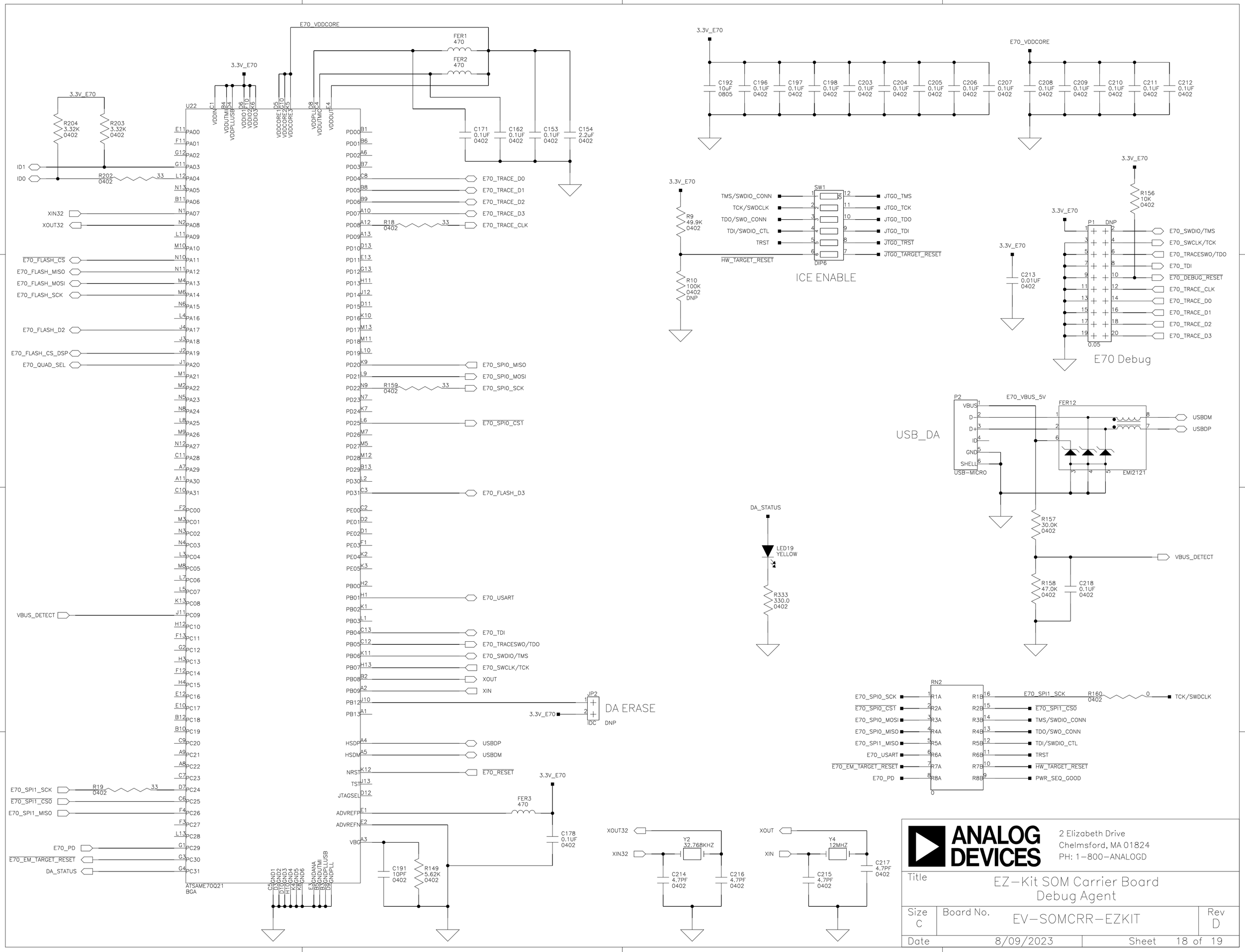
E70_VDDCORE
FER1 470
FER2 470
3.3V_E70
U22
R204 3.32K 0402
R203 3.32K 0402
R202 0402 33
ID1
ID0
XIN32
XOUT32
E70_FLASH_CS
E70_FLASH_MISO
E70_FLASH_MOSI
E70_FLASH_SCK
E70_FLASH_D2
E70_FLASH_CS_DSP
E70_QUAD_SEL
VBUS_DETECT
E70_SPI1_SCK
E70_SPI1_CS0
E70_SPI1_MISO
E70_PD
E70_EM_TARGET_RESET
DA_STATUS
ATSAME70Q21 BGA
C171 0.1UF 0402
C162 0.1UF 0402
C153 0.1UF 0402
C154 2.2uF 0402
E70_TRACE_D0
E70_TRACE_D1
E70_TRACE_D2
E70_TRACE_D3
E70_TRACE_CLK
R18 0402 33
E70_SPI0_MISO
E70_SPI0_MOSI
E70_SPI0_SCK
R159 0402 33
E70_SPI0_CST
E70_FLASH_D3
E70_USART
E70_TDI
E70_TRACESWO/TDO
E70_SWDIO/TMS
E70_SWCLK/TCK
XOUT
XIN
JP2
IDC
DA ERASE
DNP
USBDP
USBDM
E70_RESET
R19 0402 33
FER3 470
C178 0.1UF 0402
C191 10PF 0402
R149 5.62K 0402
3.3V_E70
C192 10uF 0805
C196 0.1UF 0402
C197 0.1UF 0402
C198 0.1UF 0402
C203 0.1UF 0402
C204 0.1UF 0402
C205 0.1UF 0402
C206 0.1UF 0402
C207 0.1UF 0402
C208 0.1UF 0402
C209 0.1UF 0402
C210 0.1UF 0402
C211 0.1UF 0402
C212 0.1UF 0402
R9 49.9K 0402
R10 100K 0402 DNP
SW1
DIP6
TMS/SWDIO_CONN
TCK/SWDCLK
TDO/SWO_CONN
TDI/SWDIO_CTL
TRST
HW_TARGET_RESET
JTGO_TMS
JTGO_TCK
JTGO_TDO
JTGO_TDI
JTGO_TRST
JTGO_TARGET_RESET
ICE ENABLE
R156 10K 0402
P1
DNP
0.05
E70_SWDIO/TMS
E70_SWCLK/TCK
E70_TRACESWO/TDO
E70_TDI
E70_DEBUG_RESET
E70_TRACE_CLK
E70_TRACE_D0
E70_TRACE_D1
E70_TRACE_D2
E70_TRACE_D3
E70 Debug
C213 0.01UF 0402
USB_DA
P2
VBUS
D-
D+
ID
GND
SHELL
USB-MICRO
E70_VBUS_5V
FER12
EMI2121
USBDM
USBDP
R157 30.0K 0402
R158 47.0K 0402
C218 0.1UF 0402
VBUS_DETECT
LED19 YELLOW
R333 330.0 0402
RN2
E70_SPI0_SCK
E70_SPI0_CST
E70_SPI0_MOSI
E70_SPI0_MISO
E70_SPI1_MISO
E70_USART
E70_EM_TARGET_RESET
E70_PD
E70_SPI1_SCK
R160 0402 0
TCK/SWDCLK
E70_SPI1_CS0
TMS/SWDIO_CONN
TDO/SWO_CONN
TDI/SWDIO_CTL
TRST
HW_TARGET_RESET
PWR_SEQ_GOOD
Y2 32.768KHZ
C214 4.7PF 0402
C216 4.7PF 0402
Y4 12MHZ
C215 4.7PF 0402
C217 4.7PF 0402
ANALOG DEVICES
2 Elizabeth Drive
Chelmsford, MA 01824
PH: 1-800-ANALOGD
Title
EZ-Kit SOM Carrier Board
Debug Agent
Size C
Board No. EV-SOMCRR-EZKIT
Rev D
Date 8/09/2023
Sheet 18 of 19

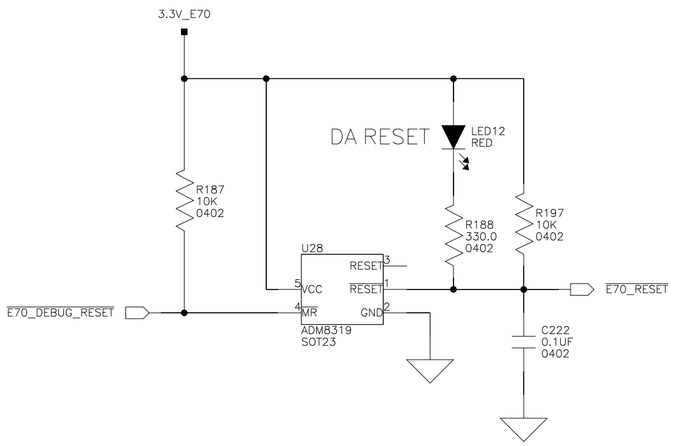

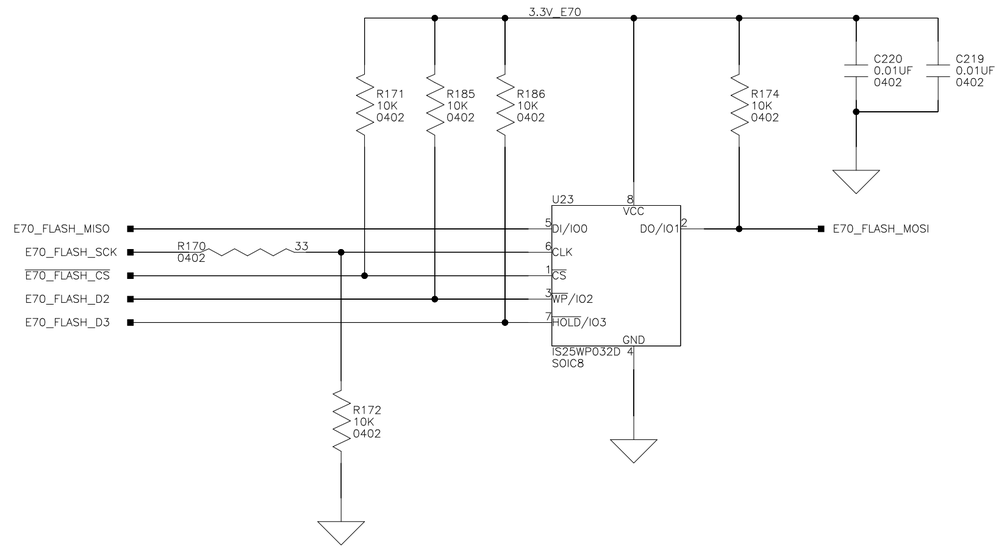

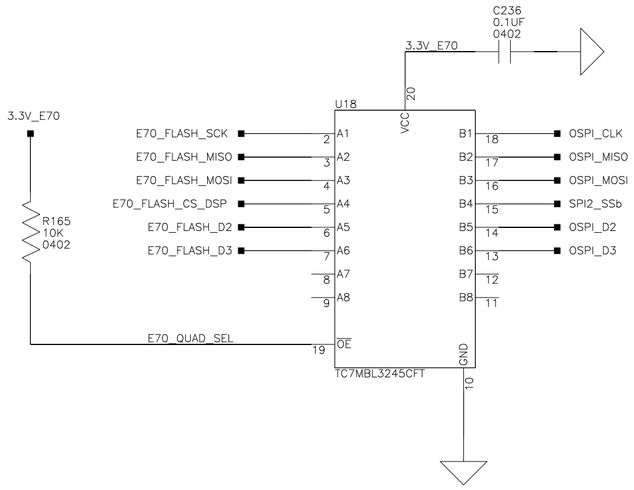

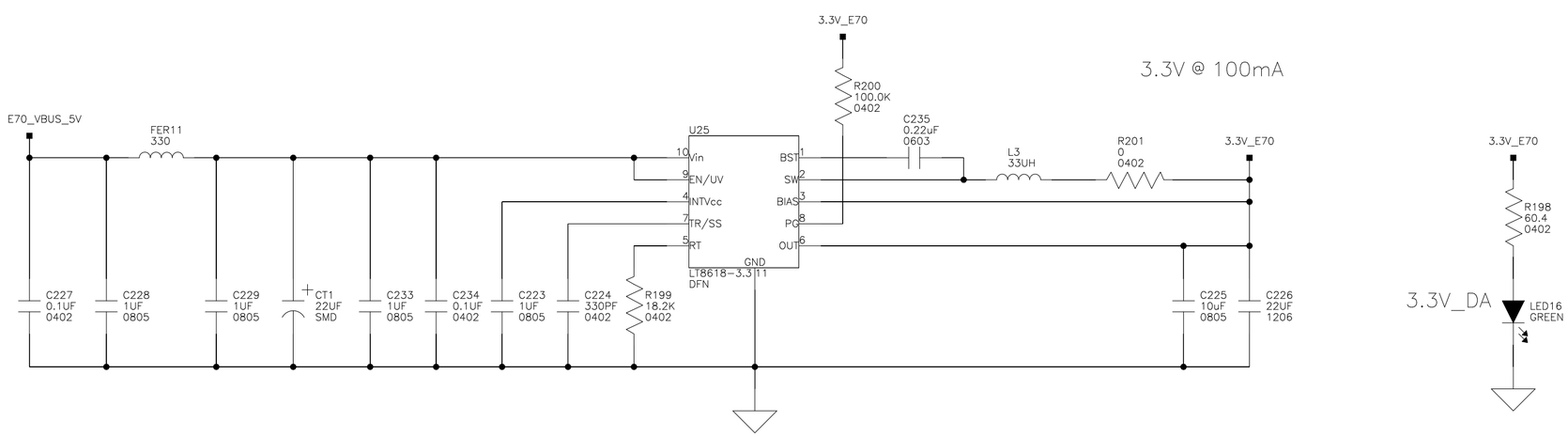

ANALOG DEVICES

2 Elizabeth Drive
Chelmsford, MA 01824
PH: 1-800-ANALOGD

Title	EZ-Kit SOM Carrier Board Debug Agent Power	
Size C	Board No. EV-SOMCRR-EZKIT	Rev D
Date 8/09/2023	Sheet 19 of 19	